Project Name: **UNIVERSITY OF CALIFORNIA, MERCED**
CLASSROOM & ACADEMIC OFFICE BUILDING
Project No.: **900290**

ADDENDUM NO. 2

to the

CONTRACT DOCUMENTS

February 28, 2014

I. Bidder acknowledges that it is the Bidder's responsibility to ascertain whether any Addenda have been issued and if so, to obtain copies of such Addenda. Bidder therefore agrees to be bound by all Addenda that have been issued for this bid.

This Addendum forms a part of the Contract Documents and modifies the original Bidding Documents. The following changes, additions, or deletions shall be made to the following documents as indicated and all other Contract Documents shall remain the same.

II. CLARIFICATIONS

A. PRE-BID QUESTIONS – Questions received from bidders and responses are as follows:

1. Q. T4.21 Note 3 states Painted wall surface for projection display. See architectural plans for exact size and location for finished surface. Paint surface per material specification. (RFI038)

   A. Bid Package 9-5 Painting will paint the required surfaces for the projection display.

III. BIDDING/CONTRACT DOCUMENTS AND DIVISION 1 SPECIFICATIONS – VOLUME 0

1. **REVISE Advertisement for Bids;** Extend the Bid date from **March 4, 2014 to March 18, 2014, Last day to submit RFI's will be March 6, 2014.**

2. Section 01 22 00 1.3.A.3 Unit Prices: **ADD Unit Price No. 3, Remove & Relocate Gingko tress and Exhibit ADD 2.**

2. Section 01 51 00 1.8.A; **DELETE The CM/Contractor shall be charged $5.77 per 1000 gals of water used.**

IV. DIVISION 2 – 33 SPECIFICATIONS – VOLUME 1 & 2

1. Q. Section 21 13 00 1.01C - Please confirm that the Fire Sprinkler bid package will not be required to "Arrange and pay for all wiring…", shown on the 2nd sentence of this specs. (RFI054)

   A. Confirmed. **DELETE the 2nd sentence on this section "Arrange and pay for all wiring and final connections between components installed under this section and**

Division 28. Bid Package 26-1 will include all conduits, boxes, wiring as required to complete the Fire Alarm system.

2. Q. Section 21 13 00.2.09A (items 9, 10, 11, 13 & 14) Please clarify who is responsible for the conduits, junction boxes, and wiring etc typically covered by the Fire Alarm subcontractor. (RFI055)

   A. For spec section 21 13 00-2.09A, items 9, 10, 11, 13 & 14, Division 26-1 will provided all wiring, conduit, material, and labor for the fire sprinkler water flow switches, tamper switches, inter-connections and connections to the fire alarm panels. Fire sprinkler contractor is not to include any electrical work or cost.

3. Section 03 30 00 Cast-In-Place Concrete; **REVISE** paragraph 1.12.B.6 to referenced "Landscape Cast-In-Place concrete for certain exposed to view exterior concrete elements. (Clarification).

4. Q. Could you furnish me with the Campus Standard for the removable pipe bollards per Site Furnishings 125740 2.4B? I see the fixed bollards have been specified as Creative Pipe. (RFI030)

   A. Attached to this Addendum 2 are the requested details for the removable pipe bollards including finish requirements.

V. **DRAWINGS**

C4.01	Utility Plan	Callout and detail references added for irrigation backflow preventer (UC Merced directive)
C5.01	Construction Details	Detail 6 updated water meter service portion and notes added; detail 8 notes added (UC Merced directive)
C5.02	Construction Details	Added detail 10 irrigation service (UC Merced directive)
L2.02	Irrigation Details	Detail 2 deleted, note added to refer to Civil for campus standard water service (UC Merced directive)
A0.01A	Index Sheet	Sheet updated with Addendum No. 2 inclusions
A2.11	First Floor Plan	Note added, remove area drain at Rm 190. (Add Alt. #2)
A2.21	Lantern Plan	PV Structure indicated (Add Alt. #3)
A3.10	Overall Building Elevations	Note added for future louver location on North elevation, indicated on elevations (Add Alt. #3)
A4.65	Exterior Section Details	Sheet note added, concrete keynotes spec. section reference updated (Clarification)
A5.01	ENLARGED STAIR PLANS AND SECTIONS	Concrete keynotes spec. section reference updated (Clarification)

A6.08	INTERIOR ELEVATIONS	Corrections/updates made to interior elevations at Rm 190 base bid. (Clarification)
A7.01	First Floor Reflected Ceiling Plan	Add Alternate #2 RCP callout/plan view added (Add Alt. #2)
A8.30	First Floor Finish Plan & Schedule	Finish legend updated, Rm 190 floor finish and Add Alternate #2 finish added (Add. Alt # 2)
S0.07	Pv Support Loading Criteria	Add sheet defining PV load criteria. (Add. Alt. #3)
S2.01	Foundation & First Floor Framing Plan	Add sheet note 23, add reference to sheet note 23 @ exterior exposed to view pilasters, stem walls, curbs, Stair 1, add clarifying note to detail 2. (Clarification)
S2.03	Third Floor Framing Plan	Remove erroneous callout. Revise beam end connections at tie backs at roof south of Line E. (Correction)
S2.04	Roof Framing Plan	Delete roof beams Line D.5-2, add beam west of Line 2, north of B.5, move screen wall post to D.5-2, add moment connection beam D.5-2. Remove erroneous callout near A-5. (Change to base bid that can accommodate Add. Alt. #3)
S2.05	Lantern Roof Framing Plan	Revise beam end connections at tie backs at Lantern roof Add partial plan detail 13 showing PV structure. (Add Alt. #3)
S2.06	Mechanical Screen Framing Plan	Revise screen wall framing Line D.5-2. (Change to base bid that can accommodate Add. Alt. #3)
S2.07	Pv Support Framing Plan	Add sheet showing PV support framing (Add Alt #3)
S4.06	Collector Details	Revise detail references in Detail 11. (Clarification)
S5.06	Non-Frame Steel Column Schedule & Details	Minor revisions clarifying column schedule. Add HSS posts to tops of columns Line C, 2 through 11. (Add. Alt. #3)
S5.08	Transfer Girder Details	Revise notes Detail 1. (Clarification)
S5.14	Steel Details	Revise detail references in Detail 12. (Clarification)
S5.31	Mechanical Screen Elevations	Add Detail References in Elevation 1 (Clarification)
S5.32	Mechanical Screen Details	Minor revisions to details 2, 3, 4, 5, add detail 15. (Clarification)
S5.41	Pv Support Framing Elevations	Add sheet - elevations and sections. (Add Alternate #3)
S5.42	Pv Support Framing Details	Add sheet - connections. (Add Alternate #3)
M2.12A	Enlarged Second Floor Plan	Revise perimeter office diffusers direction of throw from 2 to 3. (Clarification)
M2.12B	Enlarged Second Floor Plan	Revise perimeter office

		diffusers direction of throw from 2 to 3. (Clarification)
M2.12C	Enlarged Second Floor Plan	Revise perimeter office diffusers direction of throw from 2 to 3. (Clarification)
M2.13A	Enlarged Third Floor Plan	Revise perimeter office diffusers direction of throw from 2 to 3. (Clarification)
M2.13B	Enlarged Third Floor Plan	Revise perimeter office diffusers direction of throw from 2 to 3. (Clarification)
M2.13C	Enlarged Third Floor Plan	Revise perimeter office diffusers direction of throw from 2 to 3. (Clarification)
E3.11C	Enlarged First Floor Plan - Lighting - Area C	Revised fixture type, added lighting control diagram references, revised mounting height of fixtures. (Clarification)
E5.11	Enlarged Plans And Elevations	Revised and added circuit information on detail 6. (Clarification)
E7.03	Panel Schedules	Revised title, equipment designation and monitoring descriptions. (Clarification)

VI. **ATTACHMENTS**

1. Advertisement for Bid
2. 01 22 00 Unit Prices
3. 03 30 00 Cast-In-Place Concrete
4. Removable Pipe Bollard Details
5. Exhibit ADD 2 Tree Relocation 01 22 00
6. 21 13 00 Fire Sprinkler
7. 01 51 00 Temporary Utilities

.

UNIVERSITY OF CALIFORNIA, MERCED

By: University of California, Merced
University's Representative

_____

Leon Waller
Sr. *Project Director*

End of Addendum No.2

ADVERTISEMENT FOR BIDS

Subject to conditions prescribed by the undersigned, sealed bids for Contractors are invited for the following Work:

CLASSROOM & ACADEMIC OFFICE BUILDING
PROJECT NO.: 900290
UNIVERSITY OF CALIFORNIA
MERCED CAMPUS, MERCED COUNTY, MERCED CALIFORNIA

DESCRIPTION OF PROJECT:
The Classroom and Academic Office Building (CAOB) at UC Merced is a new, approximately 51,000 ASF and 77,000 OGSF building with 104,000 square foot site development. This is proposed to be a three story, Type II, B construction, non-rated, fully sprinkled building. The building will house 120-seat, 150-seat and 210-feet sloped floor lecture halls, two 90-seat flat floor lecture halls, classrooms, dry laboratories, offices and other support spaces.

Only pre-qualified subcontractors for CAOB are allowed to bid except for the Elevator package.

Best Value evaluation for basis of award for Bid Packages: 7-3 Metal Panels, 8-2 Glass & Glazing and 32-1 Site Concrete.

The Cost Estimate for the project is: $38,900,000.00

Bid Date: ~~March 4, 2014~~ **March 18, 2014 Addendum 2**
Bid Time: 2:00 p.m.
Bid Location: Sundt Construction, Inc.,

Bidding Documents will be made available to bidders on **Friday, February 7, 2014.** Contact Sundt Construction, Inc., Matt Lai, mwlai@sundt.com or 916-830-8000.

A **NON-MANDATORY** Pre-Bid Conference and **NON-MANDATORY** Project Site Visit will be conducted on **Thursday, February 13, 2014** beginning promptly at **10:00 AM**. Participants shall meet at **5200 N. Lake Rd, Merced, CA 95343, UC Merced Campus, in Room B of Logistical Support/Safety Facility (LSSF). Parking permits are required throughout campus and are available at the yellow dispenser at the entrance to the parking lot.**

If you need accommodations related to disabilities, please call Matt Lai, mwlai@sundt.com or 916-830-8000 at least 3 working days prior to Pre-Bid Conference/Project Site Visit or Bid Opening.

Requests for clarification or interpretation of the Bidding Documents must be in writing and received by Sundt Construction, Inc. no later than **Thursday,** ~~February 20, 2014~~ **March 6, 2014 at 4:00 P.M.** Questions received after the above-noted deadline may be answered at the discretion of the University's Representative. Questions may be emailed or faxed to:

Matt Lai, Sundt Construction
Email: mwlai@sundt.com

Revisions, additions or deletions will be made by written addenda issued by Physical Planning Design & Construction.

Bids will be received only at:

Sundt Construction, Inc.
2860 Gateway Oaks Drive, Suite 300
Sacramento, CA 95833

Bids will not be accepted after:

2:00 PM
~~March 4, 2014~~ March 18, 2014

The successful Bidder and its Subcontractors will be required to follow the nondiscrimination requirements set forth in the Bidding Documents and to pay prevailing wage rates at the location of the Work.

At the time of submission of the bid, Bidder and all subcontractors, regardless of tier, shall have the appropriate current licenses issued by the State of California Contractor's State License Board for the work to be performed.

THE UNIVERSITY OF CALIFORNIA IS AN AFFIRMATIVE ACTION/EQUAL OPPORTUNITY EMPLOYER.

SECTION 03 30 00

CAST-IN-PLACE CONCRETE

PART 1 - GENERAL

1.01 RELATED DOCUMENTS

A. Drawings and general provisions of the Contract, including General and Supplementary Conditions and Division 01 Specification Sections, apply to this Section.

B. LEED Requirements, Division 1.

C. Site Waste Management Program, Division 1.

1.02 SUMMARY

A. This Section includes

1. Cast-in-place concrete used at the building, unless otherwise noted.
2. Granular base and underslab vapor retarder beneath building slab-on-grade.
3. Construction joint waterstops.
4. Grout for baseplates and bearing plates.

B. Related Sections

1. Division 01 Section “LEED Requirements”.
2. Division 01 Section “Site Waste Management Program”.
3. Division 02 Sections for cast in place concrete for paving and site concrete.
4. Division 03 Section “Concrete Formwork”.
5. Division 03 Section “Concrete Reinforcement”.
6. Division 03 Section “Landscape Cast-In-Place Concrete” for coloring agent, mockup, and finish at topping slabs, **and for exposed to view exterior concrete at pilasters, stem walls, seats, curbs, and all concrete at Stair 1 except foundation concrete.** Addendum No. 2, February 27, 2014.
7. Division Section 05 for sequencing concrete fill on deck placement at areas tributary to second floor transfer girders and for surveying edge of deck at building enclosure.
8. Division 07 Section “Concrete Slab Applied Vapor Retarder” for concrete slab applied vapor retarder.

1.03 REFERENCES

A. Standards listed below apply where designation is cited in this Section. Where the applicable year of adoption or revision is not listed below, the latest edition applies.

B. ASTM: Standards of the American Society for Testing and Materials (ASTM) apply where designated in this Section. Use applicable year of adoption or revision as published in the 2006 “Annual Book of ASTM Standards”.

C. ACI: Standards of the American Concrete Institute (ACI) apply where designated in this section. Use applicable year of adoption or revision as published in the 2007 “ACI Manual of Concrete Practice”.

1. ACI 301 - Specifications for Structural Concrete for Buildings, 2010.
2. ACI 318 - Building Code Requirements for Reinforced Concrete, 2008.

D. CBC – 2010 California Building Code.

E. ICC-ES Evaluation Report: Where designated in this Section, products shall have an active report by the ICC Evaluation Service, Inc. evidencing compliance with provisions of the 2009 International Building Code. Reports are available at www.icc-es.org.

F. State of California, Department of Transportation (Caltrans)

1. Caltrans Standard Specifications, 2010.
2. California Test Methods (Available at www.dot.ca.gov/hq/esc/ctms/index.html)

a. California Test No. 217: Sand Equivalent.
b. California Test No. 227: Evaluating Cleanness of Coarse Aggregate.

1.04 SUBMITTALS

A. Submittal procedures and administrative provisions are established by Division 01 Section "Submittals".

1. Submittals for record purposes will not be returned to Contractor.

B. LEED Submittals:

1. Credit MR 4.1 and Credit MR 4.2: For products having recycled content, documentation indicating percentages by weight of postconsumer and pre-consumer recycled content.

a. Include statement indicating cost for each product having recycled content.

2. Credit MR 5.1 and Credit MR 5.2: Provide documentation for regionally extracted and manufactured. Regionally manufactured are assembled as finish products within a 500 mile radius of the project site. Assembly does not include on site assembly, erection or installation finished components.

C. Mix design for each concrete mix.

D. Laboratory test reports for concrete mixes. Submit for record purposes.

1. Compression test data (field experience method) or results of testing (trial batch method) used to establish mix proportions.
2. Shrinkage test data or results of testing used to establish mix proportions for shrinkage controlled concrete.

E. Material Certificates. Submit for record purposes.

1. Cementitious materials, including fly ash and slag.
2. Aggregates, including gradation and combined gradation.

F. Product data for proprietary materials and items, including admixtures, pigments, macro- fiber reinforcement, bonding agents, finish materials, curing materials, vapor retarder, waterstops, and nonshrink grout.

G. Submit ticket to Testing Agency for each batch of concrete delivered, bearing the following information.

1. Mix identification.
2. Date and time of batching.
3. Types and weights of cementitious materials. Sources, sizes and weights of coarse and fine aggregates. Weight of water added at plant. Types and volume of liquid admixtures added at plant.
4. Volume of water and liquid admixtures added subsequent to initial batching. Time and place of addition.

H. Samples as requested by Testing Agency or University Representative.

1.05 QUALITY ASSURANCE

A. Comply with applicable provisions of following codes and specifications, except where more stringent requirements are shown or specified.

1. ACI 301: Specifications for Structural Concrete for Buildings, 2010.
2. ACI 318: Building Code Requirements for Reinforced Concrete, 2008.

B. Mockups: Build mockup to verify compatibility of form release agent with waterproofing systems. Use materials and methods identical to those of completed work.

1. Size of mockup to meet recommendations of waterproofing system manufacturer, 3'-0"x3'-0" minimum.
2. Refer to specification section 03 32 00 for mockup at Vehicular Integral Color slab. This mockup will serve as the mockup for topping slabs.

PART 2 - PRODUCTS

2.01 CONCRETE MATERIALS

A. Cementitious materials and aggregates shall have a proven history of successful use together, or submit evidence satisfactory to University Representative that aggregate will not react harmfully in presence of alkalis in cement.

B. Cementitious materials and aggregates for exposed concrete shall be from same source throughout the work.

C. Cementitious Material: A combination of the following cementitious materials; subject to limitations indicated herein.

1. Portland Cement: ASTM C150, Type I or II, low alkali.

   a. Limit to 80% of cementitious material by weight, unless otherwise indicated or approved by University Representative.

2. Fly Ash: ASTM C618, Class F; except residue retained on the 45 m (No 325) sieve shall not exceed 27% and the maximum loss on ignition shall not exceed 1.0%.

   a. Limit to 25% of cementitious material by weight, unless otherwise indicated or approved by University Representative.

3. Ground Granulated Blast-furnace Slag: ASTM C 989, Grade 100 or 120.

   a. Limit slag to 40% of cementitious material by weight, unless otherwise indicated or approved by University Representative.

D. Coarse Aggregates: ASTM C33. Cleanness value shall not be less than 75 when tested in accordance with California Test 227.

E. Coarse Aggregate for Shrinkage Controlled Concrete: Provide aggregate with proven history of producing low shrinkage concrete

F. Fine Aggregate: ASTM C33. Sand equivalent shall not be less than 75 when tested in accordance with California Test 217.

1. For shrinkage controlled concrete, blend sands with proven history of producing low shrinkage concrete.

G. Water: Combined water consisting of potable water and reclaimed water from concrete production operations.

1. Combined water shall contain minimum 50% potable water.
2. Combined water shall meet the requirements of ASTM C1602 including all mandatory and all optional requirements.

H. Admixtures:

1. General:

a. Admixtures containing more than 0.05% chloride ions are not permitted.
b. Where mix contains more than one admixture, all admixtures shall be supplied by one manufacturer. Manufacturer shall certify that admixtures are compatible such that desirable effects of each admixture will be realized.

2. Water Reducing Admixture: ASTM C494, Type A. Subject to approval of University Representative, provide in necessary dosage to facilitate placement.
3. Mid-Range Water Reducing Admixture: ASTM C494, Type A/F. Where specified, provide in manufacturer's recommended (mid-range) dosage.
4. Set Retarding Admixture: ASTM C494, Type D. Subject to approval of University Representative, provide in necessary dosage to retard set.
5. Set Accelerating Admixture: ASTM C494, Type E, non-chloride. Subject to approval of University Representative, provide in necessary dosage to accelerate set.
6. High Range Water Reducing Admixture: ASTM C494, Type F, polycaboxylate formulation designed to minimize segregation and shrinkage. Where specified, provide in manufacturer's recommended (high-range) dosage.
7. Shrinkage Reducing Admixture: Eclipse (or Eclipse Floor) by W.R. Grace, Tetraguard by Master Builders, or equal. Provide in dosage indicated or as necessary to achieve specified shrinkage properties.

2.02 RELATED MATERIALS

A. Filter Fabric: Nonwoven polypropylene felt, 4.8 ounce per square yard weight; 310 lb puncture strength (ASTM6421), Permittivity 1.7 per second (ASTM D4491), Flow rate 135 gallons per minute per square foot. Mirafi 140N by Tencate or approved equal.

B. Granular Base, same as Coarse Aggregate, same as Drainage Layer: Broken stone or crushed or uncrushed gravel, angular, free of deleterious matter. Gradation conforming to the following: 100% passing the 3/4-inch sieve, less than 10% passing the No. 4 sieve, and less than 2% passing the No. 200 sieve.

C. Underslab Vapor Retarder: ASTM E1745, Class A plastic sheeting, with moisture transmission less than 0.01 perms in accordance with ASTM E-154, Section 7. Minimum 15 mil film thickness. Subject to compliance with requirements, provide one of the following, or equal:

Moistop Ultra 15, by Fortifiber Corporation
Stego Wrap 15 mil, by Stego Industries

D. Waterstop: Waterstop shall consist of sodium bentonite and butyl rubber compound formed into strips. Compound shall expand to seal and fill voids in construction joints to prevent water infiltration under continuous immersion and wet/dry cycling.

1. Typical (for use in concrete sections thicker than 8 inches and placed between two layers of reinforcing steel): 1-1/4" x 1/2" trapezoidal strip reinforced with a poly scrim. Same as Waterstop RX 101T by CETCO, or approved equal.
2. Thin Section (for use in sections with 6 inch minimum thickness and a single layer of reinforcing): 3/4" x 3/8" half circle. Same as Waterstop RX 102 by CETCO, or approved equal.
3. Adhesive: As recommended by waterstop manufacturer. CETSEAL by CETCO, or approved equal.

E. Evaporation Control: Monomolecular film-forming compound for temporary protection from rapid moisture loss. Subject to compliance with requirements provide one of the following, or equal.

Eucobar, by Euclid Chemical, Co.
Confilm, by Master Builders, Inc.

F. Wet Curing Blankets: 4 mil white opaque polyethylene laminated to 10 oz. burlap or nonwoven polypropelene fabric; conforming to ASTM C171, Type 1.1.3. Subject to compliance with requirements provide one of the following, or equal.

Curlap™, by Midwest Canvas Corp.
Transguard™ 4000, by Raven Industries

G. Non-reusable Wet Curing Blankets: Natural colored cellulose fabric with 3 mil clear or white impervious coating. Same as UltraCure ☐ NCF by McTech Group, Inc

H. Impervious Sheeting (for curing): Polyethelene sheeting, opaque white, 6 mils thick.

I. Membrane-Forming Curing Compounds:

1. VOC Content: Paints and coatings used on the interior of the building (i.e., inside of the weatherproofing system and applied on site) shall comply with VOC limits of San Joaquin Valley Unified Air Pollution Control District (SJVUAPCD), Rule 4601, amended 12/17/2009, and LEED-NC, whichever is more stringent. VOC limits, exclusive of colorants added to a tint base, when calculated according to 40 CFR 59, Subpart D (EPA Method 24) are as follows:

   a. Sealers: 100 g/L (per LEED NC/SCAQMD Rule 1113).

2. Type CC-1 Curing Compound: Dissipating resin curing compound conforming to ASTM C309, Type 1, Class B, with a VOC less than 100 g/L. Subject to compliance with requirements provide one of the following, or equal.

   Kurez DR-100, by Euclid Chemical Co.
   1100-Clear, by WR Meadows

3. Type CC-2 Curing and Sealing Compound: ASTM C1315, Type 1, Class A. Minimum 30% solids, water-based, non-yellowing acrylic copolymer, with a VOC less than 100g/L. Subject to compliance with requirements provide one of the following, or equal.

   VOCOMP®-30, by WR Meadows (no known equal)

4. Type CC-3 Penetrating Curing Compound: Water-based, reactive penetrant specifically formulated for concrete curing. Shall meet or exceed the water retention requirements of ASTM C1315 (0.40 kg/m2). Shall leave no surface residue and be compatible with patching compounds, paints and other wall coatings. Subject to compliance with requirements provide one of the following, or equal.

   WCE™ Concrete Cure, by Sinak (no known equal).

J. Floor Leveling Compound: High strength, Portland cement-based, nonshrink, self-leveling product designed specifically for leveling of concrete floors to receive adhered floor coverings. Compound shall install in thickness from featheredge to 1-1/2 inches in a single application. Minimum 4,000 psi compressive strength. Subject to compliance with requirements provide one of the following, or equal.

   Ardex K 15 Self Leveling Underlayment Concrete

1. Primer: Product of underlayment manufacturer recommended for substrate conditions.
2. Aggregate: Where thickness exceeds 1-inch, add well-graded, washed aggregate, of gradation and amount as recommended by underlayment manufacturer.

K. Structural Bonding Agent: Long pot life, high modulus, two-part epoxy conforming to ASTM C881. Subject to compliance with requirements specified, furnish one of the following, or equal:

   Sikadur 32 Hi-Mod LPL, Sika Corporation
   Concessive ☐ LPL, Master Builders
   Euco 452 Epoxy System, Euclid Chemical Co.

L. Nonshrink Grout: Premixed, nonmetallic, noncorrosive product, complying with ASTM C1107, Class B or C, at flowable consistency for 30 minutes for temperature extremes of 45 deg F to 90 deg F. Subject to compliance with requirements provide one of the following, or equal.

   Masterflow 555, Master Builders
   Five Star Grout, U.S. Grout Corp.

M. Crystalline Capillary Admixture: Xypex Admix C-500 by Xypex Chemical Corporation, Richmond, British Colombia, Canada. www.xypex.com. No known equal.

2.03 MIXES

A. Mixes: Proportion mixes in accordance with the requirements of Table 1, “Schedule of Concrete Mixes”.

TABLE 1: SCHEDULE OF CONCRETE MIXES

Mix	Use	Strength	Agg. Size	Slump	Cement Factor	W/C Ratio	Other Req’ts
A	Foundations, Grade Beams, Pits	4,000	Size 57	4	Not Applicable	0.50	6a,d,f
B	Slab-on-Grade	3,500	Size 57	4	550	0.45	6b,c,f
C	Fill-on Deck	3,500	Size 57	4	550	0.45	6f
D	Topping Slabs	3,000	Size 57	4	550	0.45	6b,e

1. Strength: Minimum compressive strength in psi after 28 days, tested in accordance with ASTM C39.
2. Aggregate Size: Coarse aggregate size number in accordance with ASTM C33.
3. Slump: Slump when tested in accordance with ASTM C143. Tolerance for occasional batches is plus or minus 1-inch.
4. Cement Factor: Minimum total cementitious material, measured in pounds per cubic yard.
5. W/C Ratio: Maximum water-to-cementitious material ratio by weight. Weight of water shall include all free moisture.
6. Other Requirements (apply only as noted in Schedule of Concrete Mixes):

    a. Foundation Concrete: Cementitious material shall contain 25% fly ash or 40% ground granulated blast furnace slag by weight, and may combine each up to these amounts.
    b. Shrinkage Controlled Concrete: Select materials and proportion mix to achieve shrinkage less than 0.040% when tested in accordance with ASTM C157 (SEAOC modified). Limit total water to 275 pounds maximum.
    c. Shinkage Reduced Concrete at exposed slabs: Provide shrinkage reducing admixture at the rate of 1.0 gallons per cubic yard.
    d. Include crystalline capillary admixture at 2.5% replacement of cementitious material by weight at the elevator pit including pit walls, slab, and pilasters and footings integrated there-in.
    e. Include coloring agent. Refer to specification section 03 32 00. Concrete color to match Vehicular Integral Colored concrete, see L1.00.
    f. Minimum 15% by weight flyash replacement for cement.

B. Concrete Stair and Landing Fills.

1. Compressive strength 3,000 psi at 28 days.
2. Slump three inches plus or minus one inch.

a. Slump may be increased to six inches maximum at truck by use of ASTM C494 Type A/F mid-range water reducing admixture to facilitate pumping.

3. Aggregate: Size 9 (1/2 inch) coarse aggregate blended to achieve specified combined aggregate gradation.

a. Coarse aggregate shall be from source for shrinkage controlled aggregate.

4. Water-to-cementitious material ration shall not exceed 0.50 by weight.
5. Provide shrinkage reducing admixture at dosage rate of one gallon per cubic yard.

C. Patching Mortar: Mix in proportions by volume of one part Portland cement to two parts sand. Substitute white cement for part of cement as necessary to produce color of dry patch matching surrounding concrete.

D. Landscape Concrete. Refer to specification section 03 32 00.

2.04 PROPORTIONING

A. Develop mix proportions in accordance with ACI 318, on the basis of field experience or trial batches. Trial batches shall be proportioned by Contractor's Design Laboratory.

1. Mix designs shall be accompanied by compressive test and slump test reports; and by standard deviation analysis if field experience method is used.

B. Proposed mixes shall produce concrete to strengths specified with adequate workability and proper consistency to permit concrete to be worked into forms and around reinforcement without excessive segregation or bleeding.

C. Mix design shall be subject to review by the University Representative and the Testing Agency. Mixes shall be submitted in ample time for review and adjustment, if necessary.

D. The total chloride ion content, calculated on the basis of mix proportions, shall not exceed the limits specified in ACI 318 Table 4.4.1. The total chloride ion content shall not be allowed to exceed 0.30% for any use.

1. Where reclaimed water is used, consider chloride content.

E. Adjustment to Concrete Mixes: Mix design adjustments may be requested by Contractor when job conditions, weather, or test results warrant. Revised mix design must be submitted to and accepted by University Representative before using in work.

2.05 CONCRETE MEASUREMENTS AND MIXING

A. Measurement: Materials for concrete shall be measured by weighing the aggregates and cement using equipment that is suitable, designed and constructed for this purpose. Each size of aggregate and the cement shall be weighed separately. The accuracy of all measuring

devices shall be such that quantities be measured to within the following percentages of the desired amount: 1% for cement and water, 2% for aggregates, and 3% for admixtures. Mixing water and all admixtures shall be measured by volume.

B. Mixing: All concrete shall be machine mixed in accordance with CBC Section 1905.8. Deposit concrete into final position within 90 minutes of introduction of cement.

1. Mixing time shall be reduced in hot weather in accordance with Hot Weather Concreting provisions of this Section.
2. Mixing time shall be increased to accommodate project conditions, only with prior written approval of University Representative and subject to use of set retarders, control of revolutions of mixing drum and monitoring of concrete temperature.

C. Additions: After initial batching, additions shall be limited to water, high range water reducers and non-chloride accelerators, subject to the following:

1. Additions shall be made only in the presence of Testing Agency, using suitable calibrated devices.
2. Water additions shall not exceed water-to-cementitious ratio requirements.
3. Following addition of HRWR or accelerator admixtures, complete a minimum of 70 revolutions or 5 minutes of mixing to assure a consistent mixture.

PART 3 - EXECUTION

3.01 PREPARATION

A. Examine units of work to be cast and verify that:

1. Construction of formwork is complete.
2. Required reinforcement, inserts, and embedded items are in place and securely held.
3. Concrete-receiving places are free of debris and excess water.

B. Protect finished surfaces adjacent to concrete-receiving places.

C. Construction Joints: Clean and roughen construction joint contact surfaces by removing entire surface and exposing clean aggregate solidly embedded in mortar matrix to full 1/4-inch amplitude. Do not leave laitance, loosened particles of aggregate or damaged concrete at surface.

D. Spray forms with water immediately before casting.

E. Verify edge of deck at building enclosure has been surveyed and found to be within tolerance.

F. Notify University Representative at least 24 hours before placing concrete.

3.02 UNDER SLAB-ON-GRADE CONSTRUCTION

A. Place granular base to thickness specified on Drawings. Smooth and compact surface with a vibratory plate.

B. Install separation layer of geotextile fabric, lapping all edges a minimum of 4 inches. Spot adhere to hold in place, if necessary.

C. Place underslab vapor retarder with longest dimension parallel with direction of pour, lapping seams 6 inches and sealing with manufacturer's recommended adhesive or pressure sensitive tape.

1. Seal around penetrations through vapor retarder, such as utilities, to create a monolithic membrane between the surface of the slab and the subgrade. Repair damaged vapor retarder prior to placement of concrete.
2. Where vapor retarder is interrupted at interior or edge footings, lap vapor retarder as shown on architectural drawings, 2 inches minimum over footing.

D. Repair vapor retarder damaged during placement of reinforcement or concrete with patch of vapor retarder material. Lap beyond edges of damaged area a minimum of 6 inches and seal edges as prescribed for seams.

3.03 PLACING

A. Placing Record: Record time and date of casting concrete in units of building; maintain record open to inspection by the University Representative.

B. Convey concrete as rapidly and directly as practicable to preserve quality and to prevent segregation.

C. Cold weather placement: When concrete is likely to be subjected to freezing temperatures within 24 hours or when placing concrete at air temperatures less than 40 deg F, the temperature of the concrete at the point of placement shall be at least 55 deg F for sections thinner than 12 inches and 50 deg F for sections thicker than 12 inches. Do not exceed this temperature by more than 20 deg F. Use only approved accelerating admixtures.

D. Hot Weather Placement: When air temperature exceeds 80 deg F, take special precautions to prevent slump loss, rapid setting, and plastic shrinkage; including but not limited to:

1. Cool ingredients before mixing to maintain concrete temperature at point of placement below 90 deg F. Crushed ice may be used in lieu of mixing water to control temperature.
2. Use set retarding admixture.
3. Cover reinforcing steel with water soaked burlap, so that steel temperature will not exceed ambient air temperature.
4. Convey and deposit concrete as rapidly as practicable, such that concrete temperature does not exceed 90 deg F at point of placement.

a. When air temperature exceeds 85 degrees F, deposit concrete into final position within 6o minutes of introduction of cement into mixing drum.
b. When air temperature exceeds 90 degrees, deposit concrete into final position within 45 minutes of introduction of cement into mixing drum.

5. Apply evaporation control film immediately after screeding and continue use through finishing process.

E. Placing Concrete in Forms:

1. In depositing concrete in columns or walls; provide tremies or other devices that will permit the concrete to be placed in a manner that will prevent segregation and accumulation of hardened concrete on the forms or metal reinforcement above the level of the concrete.
2. Deposit concrete in horizontal layers and in a manner to avoid inclined joints. Place each layer while preceding layer is still plastic to avoid cold joints.
3. Keep forms and reinforcement clean above pour line.
4. Do not use vibrators to transport concrete in forms.

F. Consolidating:

1. Use internal vibrators for thorough consolidation of all concrete.
2. Use size and power recommended by ACI 309 for the element of work.
3. Use consolidation techniques that minimize entrapped air; refer to ACI 309.
4. Do not place vibrators against reinforcement or forms.

G. Construction joints shall conform to typical details and be located where shown on Drawings or approved by the University Representative. Horizontal joints in walls and columns shall be at the underside of slabs. Place beams, girders, brackets, column capitals, haunches, and drop panels at the same time as the slabs.

H. Waterstops: Provide at construction joints in below grade pits and where indicated on drawings. Structural drawings may not show full extent and location of waterstops; refer to architectural drawings for extent and location of waterstops. Install waterstops in accordance with manufacturer's written instructions, using adhesive. Tightly butt ends of adjoining sections; do not overlap. Protect waterstop from wetting prior to concrete placement; replace waterstop that has partially hydrated.

1. Place typical waterstop with 3 inches minimum cover to concrete surface exposed to water, and between layers of reinforcing.
2. At thin sections, place waterstop with 2 inches minimum cover nearest to face of concrete exposed to water.

I. Concrete Slabs on Grade:

1. Do not place concrete until University Representative has observed vapor retarder and damaged areas have been repaired.
2. Do not place screed stakes through vapor retarder.

J. Suspended Slabs on Steel Framing:

1. Follow placement sequencing where noted on construction drawings.
2. Deposit concrete working outward from beam centers to avoid overloading deck.
3. Use screeding and strikeoff procedures that have proven successful in compensating for normal deflection of metal deck and steel framing.
    a. Increase fill thickness as required to compensate for the deflection of deck and steel framing.
    b. Obtain designated tolerances for level, except limit additional concrete thickness to 1”.
    c. Maintain minimum concrete thickness noted on drawings.

3.04 FINISHING FOR NON-FORMED SURFACES

A. Finish Schedule: Refer to Article 3.12, "Finish Schedule" for finish types and locations. Refer to Division 03 Section “Concrete Finishing” for specialty finishes of exposed to view concrete.

B. General: Comply with ACI 302.1R recommendations for screeding, restraightening, and finishing operations for concrete surfaces.

C. Evaporation Control: Protect concrete from rapid moisture loss before and during finishing operations. Apply evaporation-control material prior to the commencement of finishing operations and periodically during finishing when conditions dictate.

    1. Do not add water to the surface prior to the completion of finishing operations.

D. Floor Finish Tolerances:

    1. Flatness: Measure floors, including slab on grade, suspended formed slab, and suspended fill on steel deck for flatness according to the method of ASTM E1155 when floor area exceeds 10,000 square feet. Conform to the specified tolerance for each finish type as indicated.
    2. Measure floor surfaces for flatness and levelness according to the method of ASTM E1155, except as otherwise indicated. Conform to the following tolerances:
        a. Slab-on-ground and formed floor slabs to receive troweled finsh:
            1) Flatness: Overall F(F)35 with a minimum local value of F(F) 24.
            2) Levelness: Overall F(L) 25 with a minimum local value of F(L) 17.
        b. Steel framed floors to receive troweled finish:
            1) Flatness: Overall F(F)35 with a minimum local value of F(F) 24.
            2) Levelness: Contractor shall employ methods to compensate for metal deck and steel beam deflection (not for out of level of building frame) to achieve levelness of a conventional floor (comparable to a floor with overall F(L) 17), suitable for proper installation of floor finishes and building components.

3. Straightedge: Use the 10-foot straightedge method of ACI 117 for the floors listed below. Achieve an average tolerance of 5/16 inch for troweled floors and 1/2 inch for floated floors, based on five consecutive tests.

    a. Floors that are less than 10,000 square feet in area.
    b. Floors that are not scheduled to receive a trowel finish as the final finish or as part of the finishing operation.
    c. Floors that slope to drain, including but not limited to mechanical rooms, terraces, loading docks.

E. Slab Finishes:

1. Scratch Finish: While still plastic, texture concrete surface that has been screeded and bull-floated or darbied. Use stiff brooms, or rakes to produce a profile amplitude of 1/4 inch in 1 direction.

    a. Finish tolerance as required for installation of finish materials.

2. Float Finish: Consolidate surface with power-driven floats, or by hand floating if area is small or inaccessible to power driven floats. Restraighten, cut down high spots, and fill low spots. Repeat float passes and restraightening until surface is left with a uniform, smooth, granular texture.

    a. Finish tolerance: 5/16-inch (straightedge method).

3. Troweled Finish: After applying float finish, power-trowel the surface. Continue troweling passes until surface is planed to the specified tolerance and uniform in texture. Do not burnish floors intended to receive floor coverings. Grind smooth any surface defects that would telegraph through applied coatings or floor coverings.
4. Broom Finish: After floating surface, lightly steel trowel to remove irregularities. Roughen surface by drawing a fiber bristle broom, not less than 24 inches wide, across surface perpendicular to main traffic route. Produce even texture from edge to edge, lapping adjacent strokes slightly to produce uniform pattern.

    a. Finish Tolerance: 5/16 inch.
    b. Obtain University Representative's approval for texture of final finish before application.

3.05 FINISHES FOR FORMED SURFACES

A. General: Perform subsequent finishing operations as soon as practical after stripping formwork, except as specifically noted.

B. Rough-Formed: Repair honeycombed areas, fill tie holes, and remove fins exceeding 1/4 inch.

C. Smooth-Formed: Repair honeycombed areas, fill tie holes, and completely remove fins. Level abrupt offsets and projections as required to accept application of finish materials or waterproofing.

D. As-Cast Exposed to View: Concrete shall have uniform as-cast surface with minimal additional finishing being anticipated or required. Remove fins and projections by grinding without marring adjacent surface. Repair honeycombed concrete and other defects; surface blemishes will not be filled. Fill tie holes and strike flush with adjacent surfaces.

E. Related Unformed Surfaces: At tops of walls and similar unformed surfaces adjacent to formed surfaces, strike off smooth and finish with a texture matching adjacent formed surfaces.

3.06 CURING AND PROTECTION

A. General: Start initial curing as soon as free water has disappeared from concrete following finishing. Keep concrete continuously moist for 7 days minimum after placement.

B. Curing Methods:

1. Moist Curing:

   a. Continuous misting, sprinkling or ponding. Intermittent wetting is not acceptable.
   b. Disposable Curing Blanket: Pond water on concrete surface to a minimum depth of 1/8 inch. Lay blanket in accordance with manufacturer’s instructions, overlapping edges. Flatten with squeegee to remove air pockets.

2. Moisture-retaining Cover Curing: After wetting the concrete surface, cover with curing blanket or impervious sheeting, overlapping edges and extending ends 12 inches beyond area of concrete to be cured. Keep cover continuously wet through the curing period by rolling back and rewetting. Immediately repair holes or tears that occur using sheeting material and waterproof tape.

   a. After each use, expose bottom side to sun and air.

3. Compound Curing: Apply specified curing compound as soon as final finishing operations are complete. Uniformly apply two coats of compound in a continuous operation with second coat at right angles to first. The total coverage for the two coats shall be 200 square feet maximum per gallon of undiluted compound unless otherwise recommended by the manufacturer's written instructions. The compound shall form a uniform, continuous, coherent film that will not check, crack, or peel. Immediately apply an additional coat of compound to areas where the film is defective. Recoat concrete surfaces subjected to rainfall within 3 hours after the curing compound application. Maintain compound on the concrete surface throughout the curing period and immediately repair any damage.

   a. Use Type CC-1 compound, unless otherwise designated.
   b. Use Type CC-2 curing and sealing compound for floors that remain exposed to view at building interior, unless otherwise designated.
   c. Use Type CC-3 compound for formed vertical surfaces that are scheduled to be painted or receive other adhered coatings.

C. Limitations: Accomplish curing by moist curing, moisture-retaining cover curing, or compound curing, subject to the following limitations.

1. Moisture-retaining cover curing will be the only acceptable method for floors that are scheduled to receive adhered floor finishes.
2. Compound curing will not be permitted for surfaces to which other concrete, mortar or plaster is bonded.
3. Compound curing will not be permitted for surfaces to receive subsequent application of penetrants.
4. Compound cure formed surfaces to receive paint, fluid applied waterproofing or other coatings with Type CC-3 curing compound.
5. Compound curing will be the only acceptable method for floors that remain exposed in completed construction.

a. Refer to Division 03 Section “Concrete Finishing” for curing of specialty exposed to view slab surfaces.

D. Protect surfaces to remain exposed to view from damage including spalls, chips, and spills.

E. Cold Weather Requirements: Protect concrete from freezing during the first 7 days after placement.

F. Hot Weather Requirements: When hot weather conditions will cause an evaporation rate exceeding 0.2 pounds of water per square foot per hour, as determined by Figure 2.1.5 of ACI 305, cure for initial 24 hours minimum by moist cure or moisture retaining cover methods.

3.07 CLEANING, PATCHING AND DEFECTIVE WORK

A. Cleaning:

1. Remove curing compounds, form release agents or other materials employed in concrete work that prevent proper application of finishes, sealants, waterproofing materials, or other treatments within 14 days of application of curing compound. Use positive method, as recommended by compound manufacturer, to achieve complete removal.
2. Where cleaning is required, take care not to damage surrounding surfaces or leave residue from cleaning agents.

B. Where concrete is under strength, out of line, level or plumb, or shows objectionable cracks, honeycombing, rock pockets, voids, spalling, exposed reinforcement, or is otherwise defective, and in the University Representative's judgment, these defects impair the proper strength or appearance of the work, the University Representative will require its removal and replacement at the Contractor's expense.

C. Repair of Formed Surfaces: Immediately after form removal, cut out honeycombs, rock pockets, and voids that affect concrete’s durability or structural performance. Make edges of cuts perpendicular to concrete surface. Clean, dampen with water, and brush-coat surface of void with neat cement paste. Immediately fill and compact with patching mortar. Use specialty structural repair mortar for large repairs.

1. Exposed to View Concrete: At exposed to view surfaces, blend white and grey Portland cements to achieve color match with surrounding surface when dry. Patch a test area at inconspicuous locations to verify mixture and color match before proceeding with patching. Compact mortar in place and strike off even with surrounding surface.

D. Covered Floor Slabs: Observe for finish and measure surface tolerances specified for each surface. Correct low and high areas.

1. After concrete has cured at least 28 days, correct high areas by grinding.
2. Correct low areas with a repair underlayment. Prepare, mix, and apply repair underlayment and primer according to manufacturer's written instructions to produce a smooth, uniform, plane, and level surface. Feather edges to match adjacent floor elevations.

3.08 GROUTING BASEPLATES

A. Grouting Baseplates and Bearing Plates: Prior to erection, clean and roughen concrete surface beneath baseplate to full 1/4-inch amplitude; clean bottom surface of baseplate of bond-reducing materials. After columns have been positioned and plumbed, flow nonshrink grout solidly between bearing surfaces to ensure no voids remain. Comply with manufacturer's recommendations for mixing, placing, finishing and curing of grout.

3.09 FIELD QUALITY CONTROL

A. Inspection and testing will be performed in accordance with procedures and administrative requirements of Division 01 Section "Quality Requirements".

B. Testing Agency will:

1. Collect and review tickets for each batch of concrete delivered. Annotate water or admixtures added subsequent to batching.
2. Special Inspect concrete placement, as required by CBC Table 1704.4, for conformance with the Contract Documents.
3. Compressive Strength: Test concrete for compressive strength in accordance ACI 318, Section 5.6.2. Take 4 specimens per sample, test 1 at 7 days, 2 at 28 days, and retain 1 specimen.
4. Slump: ASTM C143; one test at point of discharge at start of placement and for each compressive strength sample.
5. Temperature: ASTM C1064. One test hourly at point of placement. Take additional tests where warranted by weather conditions or delays in delivery.
6. Air Content: ASTM C173; for mixes with more than 3% air, take one test hourly at point of placement.
7. Baseplate Grouting: Inspect mixing and placing of nonshrink grout. Test for compressive strength in accordance with ASTM C109. Make one sample for each 10 cubic feet of grout placed, but not less than one sample for each day's placement.
8. Measure floor flatness and level for conformance to specified tolerances. Measure within 21 days or placement.

C. The Contractor shall pay Testing Agency for investigating of low-strength compressive test results in accordance with CBC Section 1905.6.5.

3.10 FINISH SCHEDULE

A. The concrete finish types specified in "Table 2 - Finishes for Non-Formed Surfaces" and "Table 3 - Finishes for Formed Surfaces", which follow, shall be used except as otherwise designated on Drawings.

1. Exposed surfaces that are scheduled to receive paint, sealers or other thin finish coatings shall be considered "Exposed-to-View".
2. Exposed-to-View Curbs and Stair Risers: Provide monolithic finish by stripping forms while concrete is green and steel-troweling surfaces to a dense, hard finish with corners intersections and terminations slightly rounded.

B. Refer to Division 03 Section "Concrete Formwork" for formwork requirements, in particular for exposed-to-view surfaces.

C. Refer to Division 03 Section “Concrete Finishes” for specialty finishes. The requirements of the “Concrete Finishes” Section shall take precedence over the requirements of this Section in case of conflicts.”

TABLE 2: FINISHES FOR NON-FORMED SURFACES			
Surface	Finish	Curing	Notes
Typical Interior Spaces, scheduled to receive glue-adhered finishes, including carpet and resilient flooring.	Troweled	Moisture Retaining Cover or Type CC-1 compound	Includes shelled interior spaces to receive glue-adhered finishes in the future. Remove compound per paragraph 3.7.A
To receive thin-set tile	Troweled	Moisture Retaining Cover	Light brush to open surface. Remove compound per paragraph 3.7.A
To receive bonded topping or mortar bed	Scratched	Moisture Retaining or Cover or Type CC-1 compound.	Remove compound per paragraph 3.7.A
To receive roofing.	Floated	Any Method	
Exposed at mechanical and storage rooms.	Troweled	Type CC-2 Compound	
Exposed at stair benches	Troweled	Type CC-2 Compound	Stair 1, Level 1. Light sandblast, see material legend A3.10.
Exposed at stair landings and treads.	Troweled	Type CC-2 Compound	Stairs at elevator roof lobby. Apply Frictex NS at 0.50 pounds per square foot. Apply following manufacturer's recommended procedures.
To receive epoxy coating.	Troweled	Moisture Retaining Cover or Type CC-1 compound	Remove compound per paragraph 3.7.A
To receive Hot Rubberized Deck System or waterproofing	Troweled	Moisture Retaining Cover or Type CC-1 compound	Second Floor walkway. Refer to specification section 07 55 56. Remove compound per paragraph 3.7.A
Topping Slabs	Refer to Specification Section 03 32 00 for finish and curing. Finish surface to match approved mock-up of Vehicular Integral Color landscape slab, see L1.00.		

TABLE 3: FINISHES FOR FORMED SURFACES		
Surface	Finish	Notes
Concealed, except as otherwise noted.	Rough Formed	
To receive waterproofing or cement plaster	Smooth Formed	Cure with moisture retaining cover cure or Type CC-3 curing compound. Remove compound per paragraph 3.7.A.
Pits (inside face)	Smooth Formed	
Site Concrete	Refer to Specification Section 03 32 00	Stair bench walls, Stair 1, First Floor.

END OF SECTION

14. Repair of all damages done to premise as a result of this installation and removal of all debris left by those engaged in this installation.

15. Repair leaks in piping and/or replace associated devices that are damaged during pressure testing work.

C. Coordinate with Division 26 all electrical power and fire alarm signal connection requirements. ~~Arrange and pay for all wiring and final connections between components installed under this section and Division 28.~~ ADDENDUM 2 RFI054

D. Provide contacts and appurtenances for interface with Building Control System.

1.02 RELATED WORK AND REQUIREMENTS

A. Requirements of General Conditions, Division 1.

B. Section 01 91 13 – Commissioning.

C. Section 21 12 00 – Standpipes and Hoses.

D. Section 23 05 00 – Basic Mechanical Materials and Methods.

E. Section 230529 – Hangers and Supports.

F. Section 23 05 53 – Mechanical Identification.

G. Divisions 21 and 22 sections.

H. Division 26 - Electrical

I. Division 28 – Fire Alarm and Mass Notification system.

1.03 REFERENCE STANDARDS

A. American National Standards Institute (ANSI)

1. B16.22 Wrought Copper and Bronze Solder Joint Pressure Fittings.

B. American Society for Testing and Materials (ASTM)

1. A53 Standard Specification for Pipe, Steel, black and Hot-dipped, Zinc-coated, Welded and Seamless.

2. A135 Specification for Electric-Resistance-Welded Steel Pipe.

3. A194 Specification for Carbon and Alloy Steel Nuts for Bolts for High pressure and High-Temperature Service.

4. A320 Specification for Alloy Steel Bolting Materials for Low-Temperature Service.

5. A795 Specification for Black and Hot-Dipped Zinc-Coated (Galvanized) Welded and Seamless Steel Pipe for Fire Protection Use.

6. B88 Seamless Copper Water Tube.

Removable Bollard Detail

Campus Standard

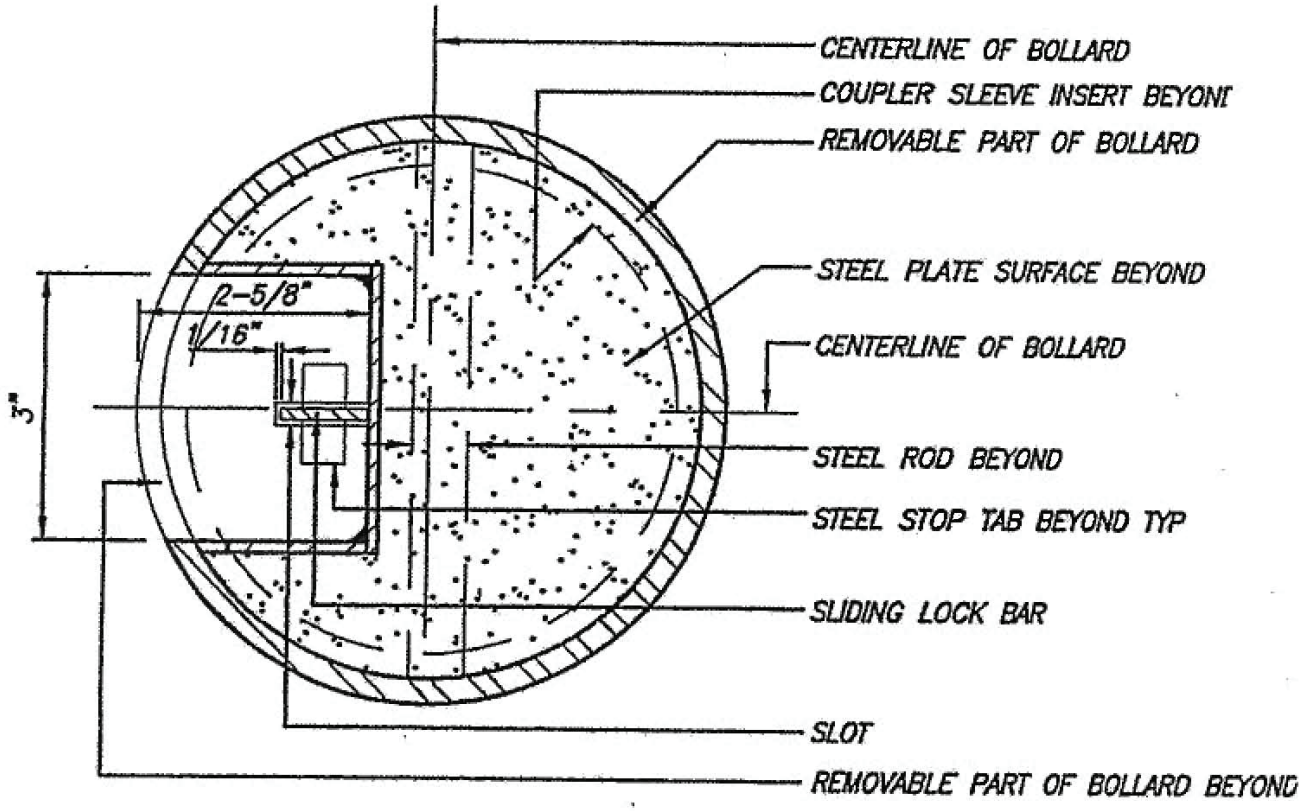

REMOVABLE BOLLARD HAND HOLE

N.T.S.

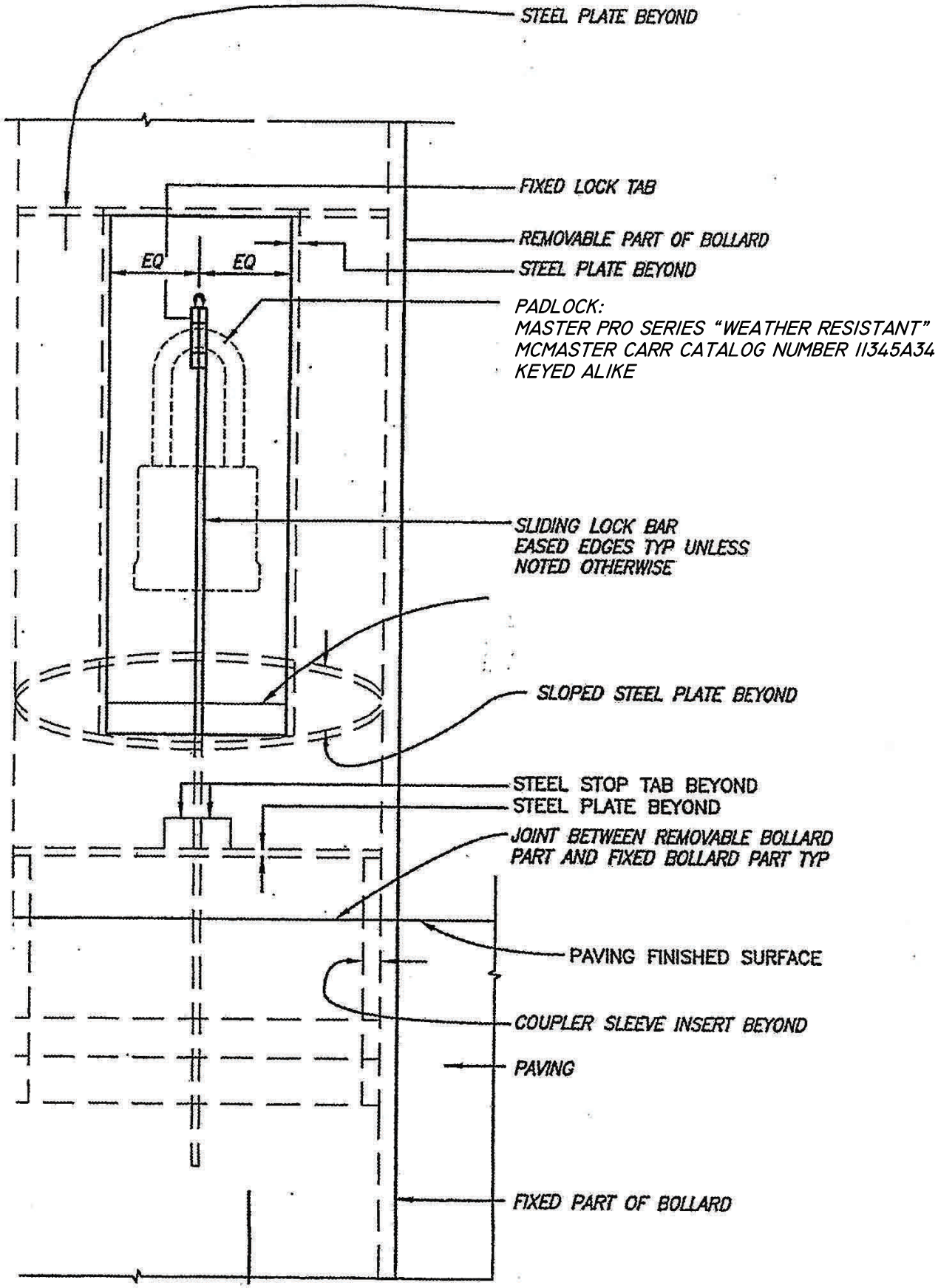
STEEL PLATE BEYOND
FIXED LOCK TAB
REMOVABLE PART OF BOLLARD
STEEL PLATE BEYOND
EQ
EQ
PADLOCK:
MASTER PRO SERIES "WEATHER RESISTANT"
MCMASTER CARR CATALOG NUMBER 11345A34
KEYED ALIKE
SLIDING LOCK BAR
EASED EDGES TYP UNLESS
NOTED OTHERWISE
SLOPED STEEL PLATE BEYOND
STEEL STOP TAB BEYOND
STEEL PLATE BEYOND
JOINT BETWEEN REMOVABLE BOLLARD
PART AND FIXED BOLLARD PART TYP
PAVING FINISHED SURFACE
COUPLER SLEEVE INSERT BEYOND
PAVING
FIXED PART OF BOLLARD

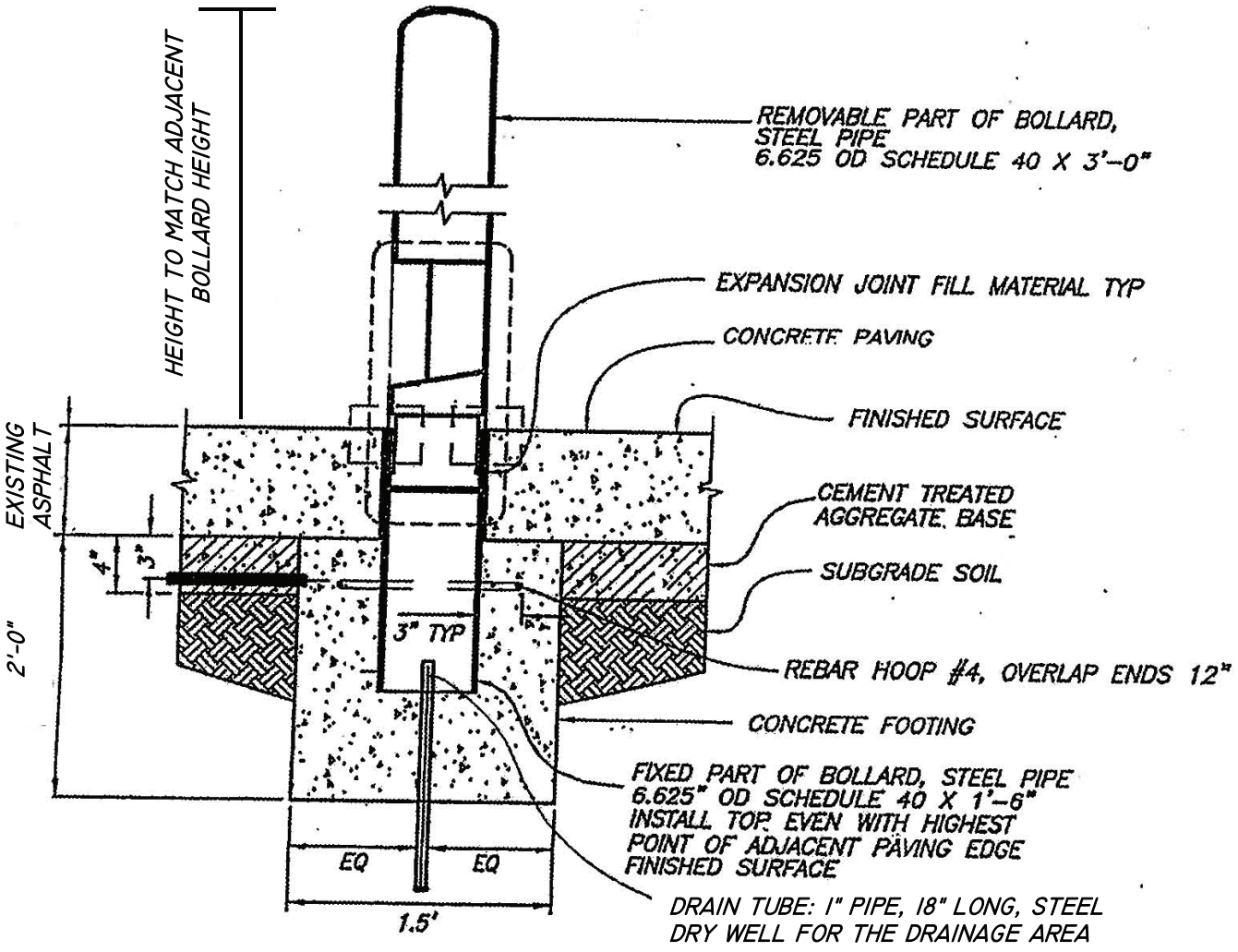

BOLLARD DETAIL

N.T.S.

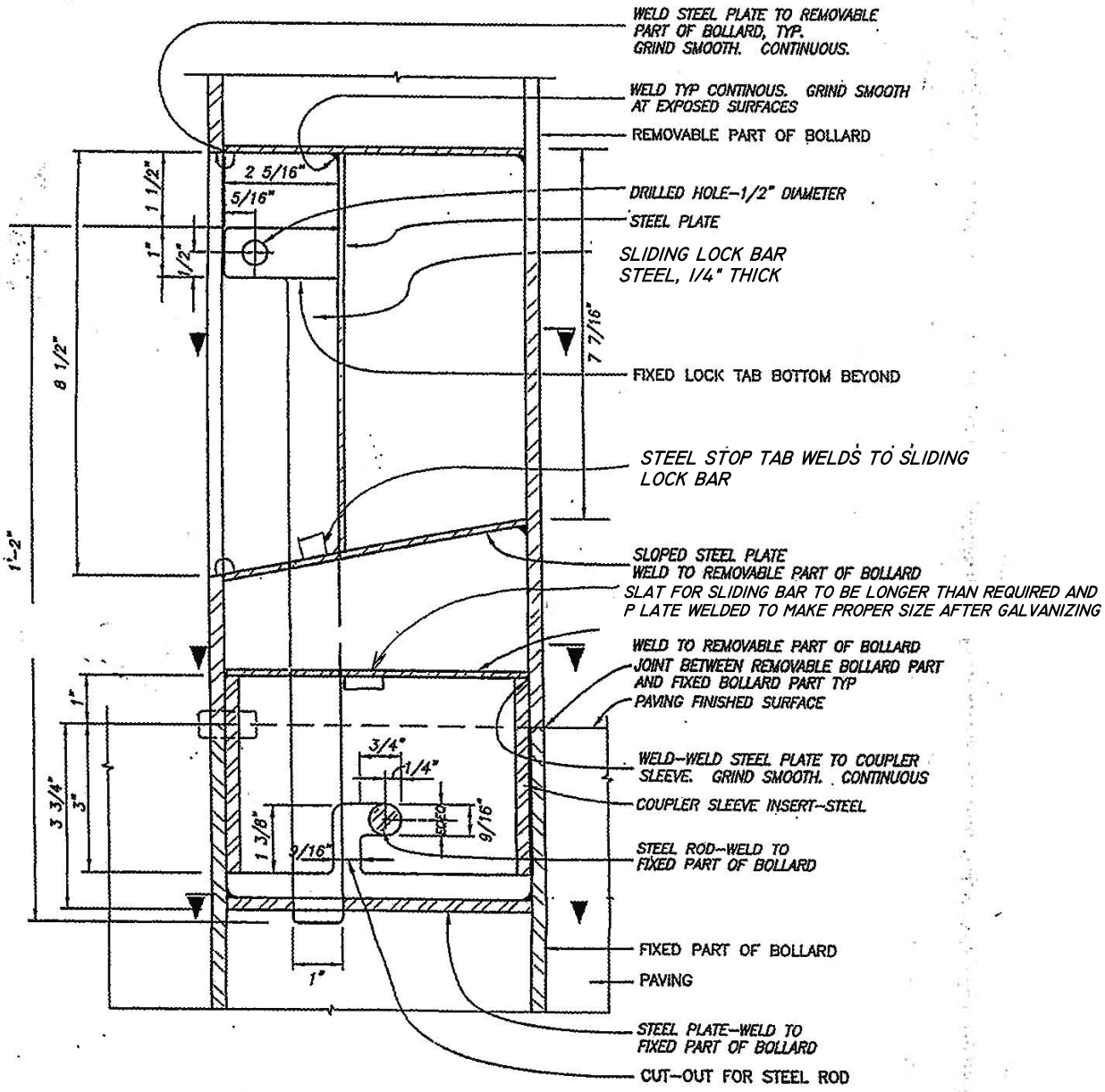

REMOVABLE
BOLLARD HAND HOLE

N.T.S.

Bollard Finish & Color

Finish: Power Coated

Color Manufacturer: Tiger Drylac U.S.A Inc.

Drylac: 49/72530

Color: RAL 7023 (SM GL Tribo)

Batch Number: CAL 11944GG

© 2013 Google
17 m
Google earth

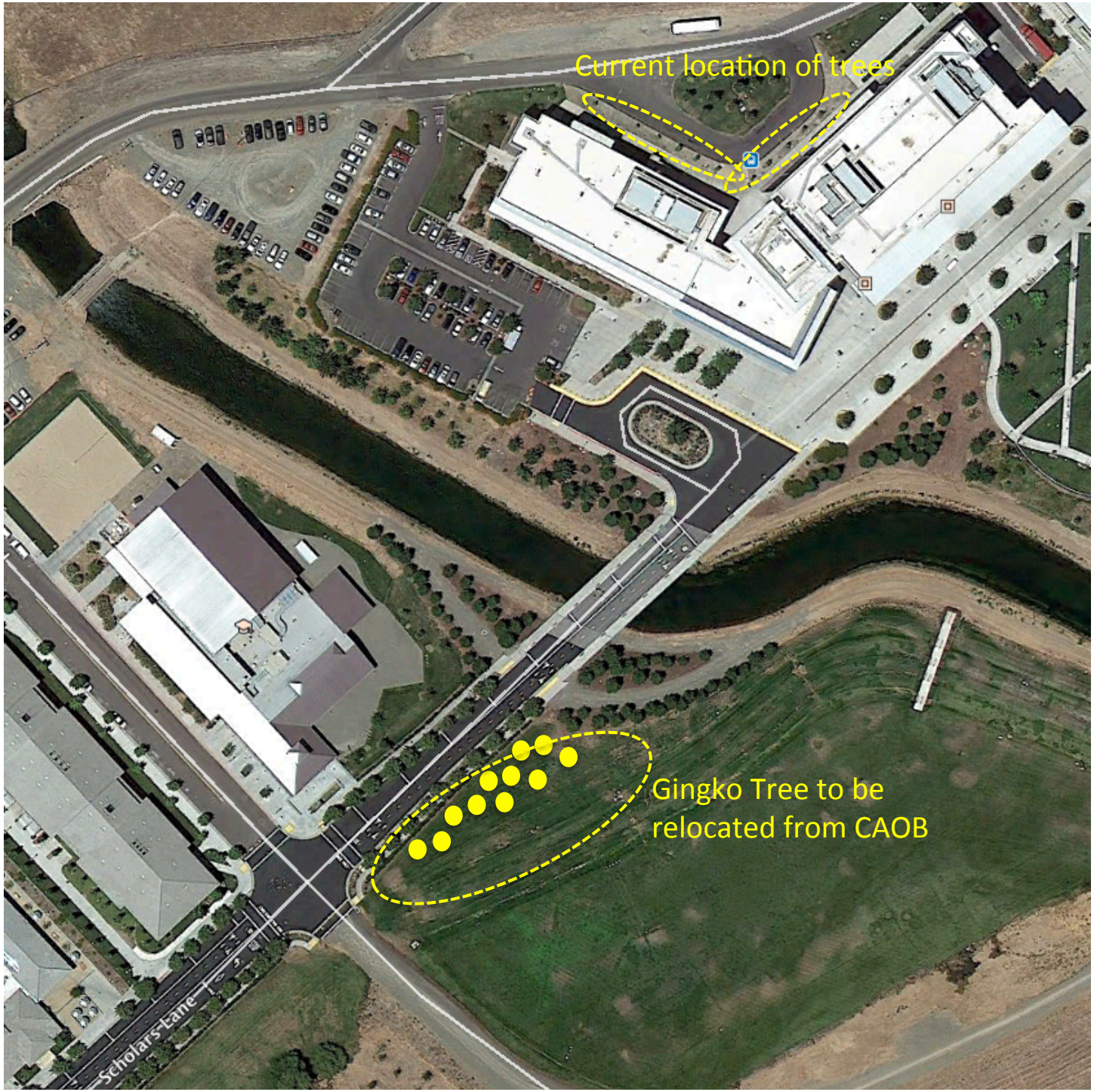
Current location of trees
Gingko Tree to be
relocated from CAOB
Scholars Lane

SECTION 01 51 00
TEMPORARY UTILITIES

PART 1 - GENERAL

1.1 REQUIREMENTS

A. CM/Contractor shall provide and maintain temporary utilities for construction operations and related necessary temporary structures. Remove them when they are no longer needed.

B. CM/Contractor shall pay for connections/disconnections of all temporary utilities; e.g., gas, water, power, and telephone.

C. CM/Contractor shall pay for connections for water and electricity to Project site sources.

D. University does not guarantee amounts of water and electricity available from existing University's sources, nor will the University be responsible for interruptions in service.

E. CM/Contractor shall maintain and operate systems to provide continuous service.

F. CM/Contractor shall modify and extend systems as required.

G. Materials may be new or used, but shall be adequate for the required purposes. Their use and methods of installation shall not create unsafe conditions or violate requirements of Applicable Codes Requirements.

1.2 REMOVAL AND RECONDITIONING

A. CM/Contractor shall remove all temporary services installed as a requirement of these Contract Documents. Restore utilities to their original condition at the completion of Work.

B. CM/Contractor shall legally and properly dispose of all debris resulting from removal and reconditioning operations.

C. CM/Contractor shall direct Concrete, Drywall and Painting Subcontractors to patch and repair building elements as required by temporary utility removals.

1.3 REQUIREMENTS OF REGULATORY AGENCIES

A. CM/Contractor shall install and use temporary utilities in accordance with latest version of the following:

1. California Electrical Code.
2. Federal, State, and local codes and regulations.
3. Utility company requirements.

1.4 TEMPORARY ELECTRICITY

A. University will not provide electricity free of charge. CM/Contractor shall make

connections to temporary power in coordination with University Representative, and make account arrangements directly with PG&E for that temporary power service. When the temporary power connection is switched over to the University's electrical service the CM/Contractor shall meter their temporary electricity use and will be charged based on average UC Merced rates.

B. Refer to Instructions to Bidders for temporary electrical scope of work and CM/Contractor's responsibility.

1.5 TEMPORARY FIRE PROTECTION

A. CM/Contractors shall conform to the rules, regulations, and instructions of the University and the Designated Campus Fire Marshal (DCFM) and such agencies having jurisdiction or identified by the University's Representative. The CM/Contractor shall:

1. Ensure that no burning shall be done on Project site.
2. Provide and maintain fire protection equipment including extinguishers, fire hoses, and other equipment as necessary for proper fire protection during the course of the Work.
3. Use fire protection equipment only for extinguishing fires.
4. Locate fire extinguishers in field offices, storage sheds, tool houses, other temporary buildings, and throughout the Project site.

B. In the area under construction demolition, the CM/Contractor will provide at least 1 multi-purpose dry chemical fire extinguisher for each 3,000-square feet of building floor area. Locate fire extinguishers so that a person never has to walk more than 75 feet to obtain one. Fire extinguisher minimum size must be 4A:20BC (10 pound ABC). Use fire protection equipment only for fighting fires. Any additional fire extinguishers required for the scope of work are to be provided by the General Contractor.

C. CM/Contractor shall assigned a qualified person with authority to maintain fire protection equipment, institute fire prevention measures, be a liaison with the University's Representative, Merced County Fire Department and such agencies having jurisdiction or identified by the University's Representative, and direct the prompt removal of combustible and waste materials from the Project site. Prior to start of Work, the CM/Contractor shall organize a mandatory safety meeting. The attendees at this meeting shall at a minimum include the University's Representative, a representative of the Merced County Fire Department, the CM/Contractor's Project Site Superintendent and the CM/Contractor's Fire Liaison.

D. CM/Contractors shall instruct all subcontractors in the site fire prevention measures, the location of fire extinguishers and the procedures for dealing with fire on site.

E. Call 9-1-1 and pull fire alarm box when applicable, for any emergency. Report the exact location (building name and street intersection) and nature of the emergency. The CM/Contractor is responsible for and will be billed for fire response charges (actual cost of personnel and equipment) for any false alarm and needless call.

F. Refer to Section 01 41 00 Regulatory Requirements for permits required.

G. Vehicles or storage of materials on Project site must not obstruct, block or damage or render useless any fire hydrants, fire department connection, fire alarm box or fire access roadway. Any necessary road closures or disruption to utilities shall be requested through the University's Representative as stated in Section 01 35 00 Special Requirements.

H. Do not tamper with or work on any fire alarm or fire protection system without first gaining authorization from the University's Representative. System shutdown requests shall require a minimum of 48 hours advance notice. Contact University's Representative for any such requests.

1.6 TEMPORARY HEAT, VENTILATION AND AIR CONDITIONING

A. CM/Contractor shall provide temporary heat and ventilation as required by the Instructions to Bidders and as required to maintain adequate environmental conditions to meet specified minimum conditions for installation of materials; and to protect equipment, materials, and finishes from damage due to temperature or humidity for all work. The use of temporary heating appliances will require a Hazardous Condition Permit as specified in Section 01 41 00 Regulatory Requirements.

B. CM/Contractor shall provide adequate forced ventilation of enclosed areas to cure installed materials, to prevent excessive humidity, and to prevent hazardous accumulations of dust, fumes, vapors, or gases for their own work.

1.7 TEMPORARY SANITARY FACILITIES

A. Portable Chemical Toilets and maintenance will be provided by the CM/Contractor.

B. Permanent toilet facilities within an existing building shall not be used without written authorization of the University.

1.8 TEMPORARY TELEPHONE SERVICE

A. The CM/Contractor shall provide a mobile radio system on-site at all times for effective University's Representative communications with the CM/Contractor's field personnel. A radio will be provided to the University's Representative. Provide a Backflow Preventer with a water meter for Project use. ~~The CM/Contractor shall be charged $5.77 per 1000 gals of water used~~. **ADD 2**

1.9 TEMPORARY WATER

A. University will not provide water free of charge. CM/Contractor shall meter temporary water and will be charged based on average UC Merced rates.

B. Water may be taken from University's systems in such quantities and at such times as they are available. If this is done, the CM/Contractor using the water source shall provide all equipment, including metering, connections, and other materials necessary for extending the utility lines to where they will be used. Coordinate the installation with University's Representative. The CM/Contractor shall pay for connections and removal

of connections to the local water and power mains. CM/Contractor shall pay the University a rate of $5.77/1,000 gal of water.

C. If water is obtained from a campus fire hydrant, the hydrant valve shall not be used as a control valve. Use hydrant wrench; do not use pipe wrench. The CM/Contractor using water source shall provide all valving necessary to control the flow of water.

D. The CM/Contractor shall:

1. Use a reduced pressure backflow preventer shall be used at any connection to University's system, including fire hydrants.
2. Install according to California Administrative Code, Title 17, Section 7603(c), and test immediately after installation by a certified tester in accordance with Title 17, CAC, Section 7605(d).
3. Install piping with taps located so that water is available throughout the Project site by the use of hoses. Protect piping and fittings against freezing.
4. Provide water for human consumption in accordance with the regulatory requirements for potable water.

PART 2 - PRODUCTS (NOT USED)

PART 3 - EXECUTION (NOT USED)

END OF SECTION 01 51 00

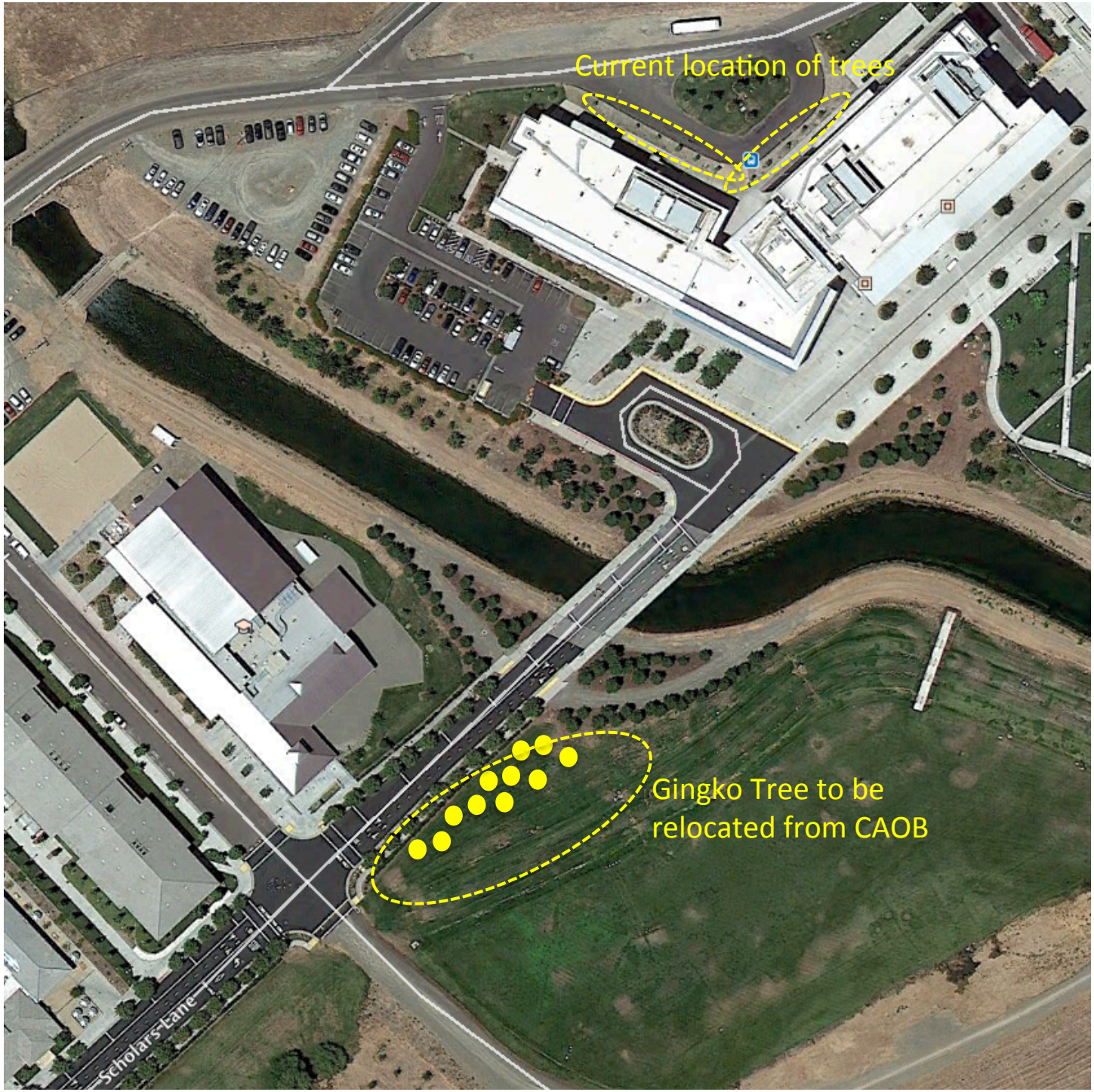
Current location of trees
Gingko Tree to be
relocated from CAOB
Scholars Lane

UCMERCED | SCB SOLOMON CORDWELL BUENZ

CLASSROOM AND ACADEMIC OFFICE BUILDING

Merced, California

University of California - Merced

UC PROJECT # 900290

CODE CONSULTANT
Hughes Associates, Inc.
2551 San Ramon Valley Blvd., Suite 209
San Ramon, CA 94583-1662
+1 925.314.7910

ARCHITECT
Solomon Cordwell Buenz
255 California St, 3rd Floor
San Francisco, CA 94111
+1 415.216.2450

COST CONSULTANT
Davis Langdon
300 California Street, Suite 600
San Francisco, CA 94104
+1 415.981.1004

STRUCTURAL ENGINEER
RUTHERFORD + CHEKENE
55 2nd Street, Suite 600
San Francisco, CA 94105
+1 415.568.4400

ACOUSTICAL CONSULTANT
Charles M. Salter, Inc.
130 Sutter Street, Suite 500
San Francisco, CA 94104
+1 415.397.0442

MEP/FP ENGINEER
GAYNER ENGINEERS
1133 Post Street
San Francisco, CA 94109
+1 415.474.9500

LIGHTING
Architectural Lighting Design
196 Bocana Street
San Francisco, CA 94110
+1 415.826.3399

CIVIL ENGINEER
SANDIS
70 Zoe Street # 200
San Francisco, CA 94107
+1 415.974.5071

TELECOMMUNICATION
TEECOM
1333 Broadway
Oakland, CA 94612
+1 510.337.2800

LANDSCAPE ARCHITECT
SWA Group
2200 Bridgeway Boulevard
Sausalito, CA 94966-5904
+1 415.332.5100

02.27.2014

ADDENDUM NO. 2

© 2012 Solomon Cordwell Buenz

VOLUME 1

DRAWING INDEX

GENERAL

SHEET #	SHEET DESCRIPTION	ISSUED FOR BID 12/20/2013	ADDENDUM NO. 1 02/21/2014	ADDENDUM NO. 2 02/27/2014	
A0.00	COVER SHEET	X	X	X	
A0.01	INDEX SHEET	X			
A0.01A	INDEX SHEET		X	X	
A0.10	ARCHITECTURAL SYMBOLS LEGEND	X			
A0.20	PROJECT ISOMETRICS	X			
A0.21	PROJECT ISOMETRICS	X			
A0.22	GENERAL NOTES & DEMOLITION PLAN	X			
A0.30	SITE FIRE ACCESS PLAN	X			
A0.31	CODE ANALYSIS	X			
A0.32	CODE ANALYSIS	X			
A0.35	SITE ACCESSIBLE ROUTE PLAN	X			
A0.61	FIRST FLOOR SLAB EDGE PLAN	X			
A0.62	SECOND FLOOR SLAB EDGE PLAN	X			
A0.63	THIRD FLOOR SLAB EDGE PLAN	X			
A0.64	ROOF SLAB EDGE PLAN	X			
A0.65	LANTERN DECK EDGE PLAN	X			

CIVIL

SHEET #	SHEET DESCRIPTION	12/20/2013	02/21/2014	02/27/2014	
C0.01	NOTES, LEGEND, ABBREVIATIONS	X			
C1.01	DEMOLITION PLAN	X			
C2.01	BUILDING LOCATION AND SITE PLAN	X	X		
C2.02	HORIZONTAL CONTROL PLAN	X			
C3.01	OVER-EXCAVATION PLAN	X			
C3.02	GRADING AND DRAINAGE PLAN	X			
C4.01	UTILITY PLAN	X		X	
C4.02	UTILITY SECTIONS	X			
C4.11	HOT WATER PROFILES	X			
C4.12	SANITARY SEWER AND STORM DRAIN PROFILES	X			
C4.13	CHILLED WATER PROFILE	X			
C5.01	CONSTRUCTION DETAILS	X		X	
C5.02	CONSTRUCTION DETAILS	X		X	
C6.01	WATER POLLUTION CONTROL DRAWING	X			
C6.02	WATER POLLUTION CONTROL DRAWING	X			

LANDSCAPE

SHEET #	SHEET DESCRIPTION	12/20/2013	02/21/2014	02/27/2014	
L1.00	LAYOUT PLAN	X			
L1.00A	LAYOUT DIMENSIONING	X			
L1.01	STRUCTURAL SOIL LAYOUT PLAN	X			
L1.02	GROVE ENLARGEMENT	X			
L1.03	GROVE SECTIONS	X			
L1.04	PAVING DETAILS	X	X		
L1.05	PAVING DETAILS	X			
L1.06	WALL DETAILS	X			
L1.07	SITE FURNISHING DETAILS	X			
L2.00	IRRIGATION PLAN	X			
L2.01	IRRIGATION NOTES & LEGEND	X			
L2.02	IRRIGATION DETAILS	X		X	
L3.00	PLANTING PLAN	X			

ARCHITECTURE

SHEET #	SHEET DESCRIPTION	12/20/2013	02/21/2014	02/27/2014	
A2.11	FIRST FLOOR PLAN	X		X	
A2.12	SECOND FLOOR PLAN	X			
A2.13	THIRD FLOOR PLAN	X			
A2.20	ROOF PLAN	X			
A2.21	LANTERN PLAN	X		X	
A2.30	ENLARGED 120 SEAT LECTURE HALL PLAN & RCP	X			
A2.31	ENLARGED 150 SEAT LECTURE HALL PLAN & RCP	X			
A2.32	ENLARGED 210 SEAT LECTURE HALL PLAN & RCP	X			
A2.33	ENLARGED 90 SEAT LECTURE HALL PLAN & RCP	X			
A2.40	TUTORIAL CLASSROOM, LAB, SEMINAR PLAN AND RCP	X			
A2.41	SCHOLARLY ACTIVITY, SMALL CONF. RM. PLAN AND RCP	X			
A2.42	DIG, HUMANITIES, FACULTY & ACADEMIC OFFICE PLAN AND RCP	X			
A2.43	ENLARGED CORE PLANS	X			
A3.10	OVERALL BUILDING ELEVATIONS	X		X	
A3.15	PARTIAL ELEVATIONS	X			
A3.20	OVERALL BUILDING SECTIONS	X			
A3.21	OVERALL BUILDING SECTIONS	X			
A4.10	ENLARGED EXTERIOR SECTIONS	X			
A4.11	ENLARGED EXTERIOR SECTIONS	X			
A4.12	ENLARGED EXTERIOR SECTIONS	X			
A4.20	EXTERIOR WINDOW SCHEDULE	X			
A4.21	EXTERIOR WINDOW SCHEDULE	X			
A4.45	ENLARGED CURTAIN WALL - NORTH / SOUTH	X			
A4.46	ENLARGED CURTAIN WALL - EAST	X			
A4.47	ENLARGED CURTAIN WALL - WEST	X			
A4.50	CURTAIN WALL DETAILS - PLAN	X			
A4.55	CURTAIN WALL DETAILS - SECTION	X	X		
A4.56	CURTAIN WALL DETAILS - SECTION	X			
A4.60	EXTERIOR PLAN DETAILS	X			
A4.61	EXTERIOR PLAN DETAILS	X			
A4.62	EXTERIOR PLAN DETAILS	X			
A4.63	EXTERIOR PLAN DETAILS	X			
A4.65	EXTERIOR SECTION DETAILS	X		X	
A4.66	EXTERIOR SECTION DETAILS	X			
A4.67	EXTERIOR SECTION DETAILS	X			
A4.68	EXTERIOR SECTION DETAILS	X			
A4.69	GUARD RAIL DETAILS	X			
A4.70	ROOF SECTION & PLAN DETAILS	X			
A4.80	WATERPROOFING DETAILS	X			

DRAWING INDEX

ARCHITECTURE

SHEET #	SHEET DESCRIPTION	12/20/2013	02/21/2014	02/27/2014	
A5.01	ENLARGED STAIR PLANS AND SECTIONS	X		X	
A5.02	ENLARGED STAIR PLANS AND SECTIONS	X			
A5.03	ELEVATOR HOISTWAY SECTIONS AND DETAILS	X			
A5.50	STAIR DETAILS	X			
A6.01	INTERIOR ELEVATIONS	X			
A6.02	INTERIOR ELEVATIONS	X			
A6.03	INTERIOR ELEVATIONS	X			
A6.04	INTERIOR ELEVATIONS	X			
A6.05	INTERIOR ELEVATIONS	X			
A6.06	INTERIOR ELEVATIONS	X			
A6.07	INTERIOR ELEVATIONS	X	X		
A6.08	INTERIOR ELEVATIONS	X		X	
A6.09	INTERIOR ELEVATIONS	X			
A6.10	INTERIOR ELEVATIONS	X			
A6.40	CASEWORK DETAILS	X			
A6.50	INTERIOR DETAILS	X	X		
A6.56	CATWALK/ RAISED ACCESS FLOOR DETAILS	X			
A7.01	FIRST FLOOR REFLECTED CEILING PLAN	X		X	
A7.02	SECOND FLOOR REFLECTED CEILING PLAN	X			
A7.03	THIRD FLOOR REFLECTED CEILING PLAN	X			
A7.04	ROOF REFLECTED CEILING PLAN	X			
A7.56	CEILING AND INTERIOR DETAILS	X	X		
A8.01	PARTITION TYPES	X			
A8.02	UL CODES	X			
A8.03	UL CODES	X			
A8.10	DOOR SCHEDULE	X			
A8.11	TYPICAL DOOR DETAILS & FLOOR TRANSITIONS	X	X		
A8.30	FIRST FLOOR FINISH PLAN & SCHEDULE	X		X	
A8.31	SECOND FLOOR FINISH PLAN & SCHEDULE	X			
A8.32	THIRD FLOOR FINISH PLAN & SCHEDULE	X			
A8.40	SIGN LOCATION PLANS	X			
A8.41	SIGN LOCATION PLANS	X			
A8.42	SIGN TYPES (REFERENCE ONLY)	X			
A8.43	SIGN TYPES (REFERENCE ONLY)	X			
A8.44	SIGN TYPES (REFERENCE ONLY)	X			

STRUCTURAL

	SHEET DESCRIPTION	12/20/2013	02/21/2014	02/27/2014	
S0.01	GENERAL NOTES	X			
S0.02	GENERAL NOTES	X			
S0.03	SECOND FLOOR LOADING CRITERIA	X			
S0.04	THIRD FLOOR LOADING CRITERIA	X			
S0.05	ROOF LOADING CRITERIA	X			
S0.06	LANTERN ROOF LOADING CRITERIA	X			
S0.07	PV SUPPORT LOADING CRITERIA			X	
S2.01	FOUNDATION & FIRST FLOOR FRAMING PLAN	X		X	
S2.02	SECOND FLOOR FRAMING PLAN	X			
S2.03	THIRD FLOOR FRAMING PLAN	X		X	
S2.04	ROOF FRAMING PLAN	X		X	
S2.05	LANTERN ROOF FRAMING PLAN	X		X	
S2.06	MECHANICAL SCREEN FRAMING PLAN	X			
S2.07	PV SUPPORT FRAMING PLAN			X	
S3.01	TYPICAL CONCRETE DETAILS	X			
S3.02	TYPICAL CONCRETE DETAILS	X			
S3.03	TYPICAL FOUNDATION DETAILS	X			
S3.04	CONCRETE DETAILS	X			
S3.05	CONCRETE DETAILS	X			
S4.01	BRACED FRAME ELEVATIONS	X			
S4.02	MOMENT FRAME ELEVATION	X			
S4.03	BRACED FRAME DETAILS	X			
S4.04	BRACED FRAME DETAILS	X			
S4.05	TYPICAL MOMENT FRAME DETAILS	X			
S4.06	COLLECTOR DETAILS	X		X	
S4.07	L.F.R.S. DETAILS	X			
S5.01	TYPICAL STEEL DETAILS	X			
S5.02	TYPICAL STEEL DETAILS	X			
S5.03	TYPICAL STEEL DECK DETAILS	X			
S5.04	TYPICAL STEEL DECK DETAILS	X			
S5.05	TYPICAL STEEL DECK DETAILS	X			
S5.06	NON-FRAME STEEL COLUMN SCHEDULE & DETAILS	X		X	
S5.07	NON-FRAME STEEL COLUMN DETAILS	X			
S5.08	TRANSFER GIRDER DETAILS	X		X	
S5.09	LANTERN ROOF DETAILS	X			
S5.11	STEEL DETAILS	X			
S5.12	STEEL DETAILS	X			
S5.13	STEEL DETAILS	X			
S5.14	STEEL DETAILS	X		X	
S5.15	STEEL DETAILS	X			
S5.16	ELEVATOR PENTHOUSE DETAILS	X			
S5.21	SERVICE YARD FOUNDATION PLAN, SECTIONS, AND DETAILS	X			
S5.31	PARAPET & SCREEN ELEVATIONS	X		X	
S5.32	MECHANICAL SCREEN DETAILS	X		X	
S5.41	PV SUPPORT FRAMING ELEVATIONS			X	
S5.42	PV SUPPORT FRAMING DETAILS			X	
S6.01	STAIR 1 FRAMING PLANS AND ELEVATIONS	X			
S6.02	STAIR 1 DETAILS	X			
S6.03	STAIR 2 PLANS AND ELEVATIONS	X			
S6.04	STAIR 2 DETAILS	X			
S6.05	STAIR 3 PLANS AND ELEVATIONS	X			
S6.06	TYPICAL STAIR DETAILS	X			
S6.07	GUARD RAIL DETAILS	X			
S6.11	ELEVATOR FRAMING PLANS	X			
S6.12	ELEVATOR FRAMING DETAILS	X			
S7.01	BUILDING ENCLOSURE SUPPORT ELEVATIONS	X			
S7.02	BUILDING ENCLOSURE SUPPORT DETAILS	X			
S7.03	BUILDING ENCLOSURE SUPPORT DETAILS	X			
S7.04	BUILDING ENCLOSURE SUPPORT DETAILS	X			

VOLUME 2

DRAWING INDEX

MECHANICAL

SHEET #	SHEET DESCRIPTION	12/20/2013	02/21/2014	02/27/2014	
M0.11	LEGEND, ABBREVIATIONS & SCHEDULES	X			
M0.12	SCHEDULES	X			
M0.13	SCHEDULES	X			
M0.14	SCHEDULES	X			
M0.15	SCHEDULES	X			
M1.01	SITE PLAN	X			
M2.11	OVERALL FIRST FLOOR PLAN	X			
M2.11A	ENLARGED FIRST FLOOR PLAN	X			
M2.11B	ENLARGED FIRST FLOOR PLAN	X			
M2.11C	ENLARGED FIRST FLOOR PLAN	X			
M2.12	OVERALL SECOND FLOOR PLAN	X			
M2.12A	ENLARGED SECOND FLOOR PLAN	X		X	
M2.12B	ENLARGED SECOND FLOOR PLAN	X		X	
M2.12C	ENLARGED SECOND FLOOR PLAN	X		X	
M2.13	OVERALL THIRD FLOOR PLAN	X			
M2.13A	ENLARGED THIRD FLOOR PLAN	X		X	
M2.13B	ENLARGED THIRD FLOOR PLAN	X		X	
M2.13C	ENLARGED THIRD FLOOR PLAN	X		X	
M2.14	OVERALL ROOF PLAN	X			
M2.14A	ENLARGED ROOF PLAN	X			
M2.14B	ENLARGED ROOF PLAN	X			
M2.14C	ENLARGED ROOF PLAN	X			
M4.01	AIR FLOW DIAGRAM	X			
M5.01	CHILLED WATER PIPING DIAGRAM	X			
M5.02	HEATING HOT WATER PIPING DIAGRAM	X			
M6.01	AHU DETAILS	X			
M6.02	DETAILS	X			
M6.03	DETAILS	X			
M6.04	DETAILS	X			
M7.01	CONTROL DIAGRAMS	X			
M7.02	CONTROL DIAGRAMS	X			
M7.03	CONTROL DIAGRAMS	X			
M7.04	CONTROL DIAGRAMS	X			

PLUMBING

SHEET #	SHEET DESCRIPTION	12/20/2013	02/21/2014	02/27/2014	
P0.11	LEGEND, ABBREVIATIONS & SCHEDULES	X			
P1.01	SITE PLAN	X			
P2.10	OVERALL UNDERGOUND PLAN	X			
P2.10A	ENLARGED UNDERGROUND PLAN	X			
P2.10B	ENLARGED UNDERGROUND PLAN	X			
P2.10C	ENLARGED UNDERGROUND PLAN	X			
P2.11	OVERALL FIRST FLOOR PLAN	X			
P2.11A	ENLARGED FIRST FLOOR PLAN	X			
P2.11B	ENLARGED FIRST FLOOR PLAN	X			
P2.11C	ENLARGED FIRST FLOOR PLAN	X			
P2.12	OVERALL SECOND FLOOR PLAN	X			
P2.12A	ENLARGED SECOND FLOOR PLAN	X			
P2.12B	ENALRGED SECOND FLOOR PLAN	X			
P2.12C	ENLARGED SECOND FLOOR PLAN	X			
P2.13	OVERALL THIRD FLOOR PLAN	X			
P2.13A	ENLARGED THIRD FLOOR PLAN	X			
P2.13B	ENLARGED THIRD FLOOR PLAN	X			
P2.13C	ENLARGED THIRD FLOOR PLAN	X			
P2.14	OVERALL ROOF PLAN	X			
P2.14A	ENLARGED ROOF PLAN	X			
P2.14B	ENLARGED ROOF PLAN	X			
P2.14C	ENLARGED ROOF PLAN	X			
P3.1	RAINWATER & OVERFLOR RISER DIAGRAM	X			
P3.2	SANITARY WASTE RISER DIAGRAM	X			
P3.3	WATER RISER DIAGRAM	X			
P6.1	PLUMBING CHASE DETAILS	X			
P6.2	PLUMBING DETAILS	X			

F2.11	FIRST FLOOR FIRE SPRINKLER PLANS	X			
F2.12	SECOND FLOOR FIRE SPRINKLER PLANS	X			
F2.13	THIRD FLOOR FIRE SPRINKLER PLANS	X			
F2.14	OVERALL ROOF FIRE SPRINKLER PLANS	X			
F3.1	FIRE RISER DIAGRAM	X			

ELECTRICAL

11/21/2013	SHEET DESCRIPTION	12/20/2013	02/21/2014	02/27/2014	
E0.11	LEGEND, ABBREVIATIONS, GENERAL NOTES, & DRAWING LIST	X			
E0.12	SINGLE LINE DIAGRAM - 12KV DISTRIBUTION	X			
E0.12A	SINGLE LINE DIAGRAM - 12KV DISTRIBUTION ADD ALTERNATIVES 3A & 4A	X			
E0.13	SINGLE LINE/RISER DIAGRAM	X			
E0.14	FIRE ALARM SYSTEM RISER DIAGRAM	X			
E0.15	LIGHTING CONTROL RISER DIAGRAM AND FIXTURE SCHEDULE	X			
E1.01	SITE PLAN	X			
E1.01A	SITE PLAN ADD ALTERNATES 3A & 4A	X			
E1.02	SITE PLAN	X			
E2.11	OVERALL FIRST FLOOR PLAN - POWER	X			
E2.11A	ENLARGED FIRST FLOOR PLAN - POWER - AREA A	X			
E2.11B	ENLARGED FIRST FLOOR PLAN - POWER - AREA B	X			
E2.11C	ENLARGED FIRST FLOOR PLAN - POWER - AREA C	X			
E2.12	OVERALL SECOND FLOOR PLAN - POWER	X			
E2.12A	ENLARGED SECOND FLOOR PLAN - POWER - AREA A	X			
E2.12B	ENLARGED SECOND FLOOR PLAN - POWER - AREA B	X			
E2.12C	ENLARGED SECOND FLOOR PLAN - POWER - AREA C	X			
E2.13	OVERALL THIRD FLOOR PLAN - POWER	X			
E2.13A	ENLARGED THIRD FLOOR PLAN - POWER - AREA A	X			
E2.13B	ENLARGED THIRD FLOOR PLAN - POWER - AREA B	X			
E2.13C	ENLARGED THIRD FLOOR PLAN - POWER - AREA C	X			
E2.14	ROOF PLAN - POWER	X			

DRAWING INDEX

ELECTRICAL

11/21/2013	SHEET DESCRIPTION	12/20/2013	02/21/2014	02/27/2014	
E3.11	OVERALL FIRST FLOOR PLAN - LIGHTING	X			
E3.11A	ENLARGED FIRST FLOOR PLAN - LIGHTING - AREA A	X			
E3.11B	ENLARGED FIRST FLOOR PLAN - LIGHTING - AREA B	X			
E3.11C	ENLARGED FIRST FLOOR PLAN - LIGHTING - AREA C	X		X	
E3.12	OVERALL SECOND FLOOR PLAN - LIGHTING	X			
E3.12A	ENLARGED SECOND FLOOR PLAN - LIGHTING - AREA A	X			
E3.12B	ENLARGED SECOND FLOOR PLAN - LIGHTING - AREA B	X			
E3.12C	ENLARGED SECOND FLOOR PLAN - LIGHTING - AREA C	X			
E3.13	OVERALL THIRD FLOOR PLAN - LIGHTING	X			
E3.13A	ENLARGED THIRD FLOOR PLAN - LIGHTING - AREA A	X			
E3.13B	ENLARGED THIRD FLOOR PLAN - LIGHTING - AREA B	X			
E3.13C	ENLARGED THIRD FLOOR PLAN - LIGHTING - AREA C	X			
E3.14	ROOF PLAN - LIGHTING	X			
E4.11	FIRST FLOOR PLAN - FIRE SPRINKLER	X			
E4.12	SECOND FLOOR PLAN - FIRE ALARM	X			
E4.13	THIRD FLOOR PLAN - FIRE ALARM	X			
E4.14	ROOF PLAN - FIRE ALARM	X			
E5.11	ENLARGED PLANS AND ELEVATIONS	X		X	
E6.01	DIAGRAMS	X			
E6.02	DIAGRAMS	X			
E6.03	DETAILS & DIAGRAMS	X			
E6.04	DETAILS & DIAGRAMS	X			
E6.05	DIAGRAMS	X			
E6.06	DIAGRAMS	X			
E6.07	DIAGRAMS	X			
E6.08	DIAGRAMS	X			
E6.09	DIAGRAMS	X			
E6.10	DIAGRAMS	X			
E7.01	PANEL SCHEDULES	X			
E7.02	PANEL SCHEDULES	X			
E7.03	PANEL SCHEDULES	X		X	

TECHNOLOGY

SHEET #	SHEET DESCRIPTION	12/20/2013	02/21/2014	02/27/2014	
T0.01	TECHNOLOGY TITLE SHEET	X			
T0.02	SCHEDULES - CABLING AND BACKBOX	X			
T0.03	SCHEDULES- DOOR	X			
T0.10	RISER DIAGRAM - PATHWAYS	X			
T0.11	RISER DIAGRAM - GROUNDING AND BONDING	X			
T0.12	RISER DIAGRAM - CABLING	X			
T0.13	HORIZONTAL ROUTING DIAGRAMS	X			
T0.20	RISER DIAGRAM- SECURITY	X			
T0.21	BLOCK DIAGRAM- ACAMS	X			
T0.22	BLOCK DIAGRAM- VSS	X			
T0.31	BLOCK DIAGRAM - AUDIOVISUAL	X			
T0.32	BLOCK DIAGRAM - AUDIOVISUAL	X			
T0.33	BLOCK DIAGRAM - AUDIOVISUAL TEAL/TILE ROOM	X			
T0.34	BLOCK DIAGRAM - AUDIOVISUAL	X			
T1.01	SITE PLAN - COMMUNICATIONS	X			
T2.11	FIRST FLOOR PLAN	X			
T2.12	SECOND FLOOR PLAN	X			
T2.13	THIRD FLOOR PLAN	X			
T3.11	FIRST FLOOR REFLECTED CEILING PLAN	X			
T3.12	SECOND FLOOR REFLECTED CEILING PLAN	X			
T3.13	THIRD FLOOR REFLECTED CEILING PLAN	X			
T4.11	ROOM DETAILS - BDF-1U1	X			
T4.12	ROOM DETAILS - IDF-2U1	X			
T4.13	ROOM DETAILS - IDF-3U1	X			
T4.21	ENLARGED PLANS - ROOM 140	X			
T4.22	ENLARGED PLANS - ROOM 110	X			
T4.23	ENLARGED PLANS - ROOM 170	X			
T4.24	ENLARGED PLANS - ROOM 175	X			
T4.25	ENLARGED PLANS - TUTORIAL	X			
T4.26	ENLARGED PLANS - SMALL CONF. AND SEMINAR ROOM	X			
T4.27	ENLARGED PLANS - CAVE AND MEDIA WALL	X			
T4.28	ENLARGED PLANS - LARGE CONF. AND LAB SPACE	X			
T4.29	ENLARGED PLANS - ROOM 130	X			
T4.30	ENLARGED PLANS - SCHOLARLY ACTIVITY	X			
T5.01	DETAILS - TELECOM ROOM	X			
T5.02	DETAILS - USER SPACE	X			
T5.03	DETAILS - INSTALLATION	X			
T5.04	DETAILS - LABELING	X			
T5.10	DETAILS - SECURITY	X			
T5.11	DETAILS - SECURITY	X			
T5.12	DETAILS - SECURITY	X			

SCB Solomon Cordwell Buenz
www.scb.com
Chicago 312.896.1100
San Francisco 415.216.2450
Architecture Planning Interior Design

UNIVERSITY OF CALIFORNIA
MERCED
FIRE MARSHAL
Approval of this plan does not constitute or approve any omissions or deviations from applicable regulations. Final approval is subject to field inspection. One set of approved plans shall be available on the Project site at all times.
Reviewed by: _____
Date: _____
UCM Project #: 300290

NO.	DATE	DESCRIPTION	NO.	DATE	DESCRIPTION
?	?	?			
1	02.21.2014	ADDENDUM NO. 1			
	12.20.2013	100% CONSTRUCTION DOCUMENTS			
	10.21.2013	90% CONSTRUCTION DOCUMENTS			
	07.26.2013	50% CONSTRUCTION DOCUMENTS			
	04.15.2013	100% DESIGN DEVELOPMENT			
	01.28.2013	100% SCHEMATIC DESIGN			

CLASSROOM AND ACADEMIC OFFICE BUILDING

UCMERCED

LICENSED ARCHITECT Steven Ehrlich 06-30-2015 STATE OF CALIFORNIA

© 2012 Solomon Cordwell Buenz

INDEX SHEET

Scale:

Drawn By: Author

Project Number: 2012040

Sheet Number: A0.01A

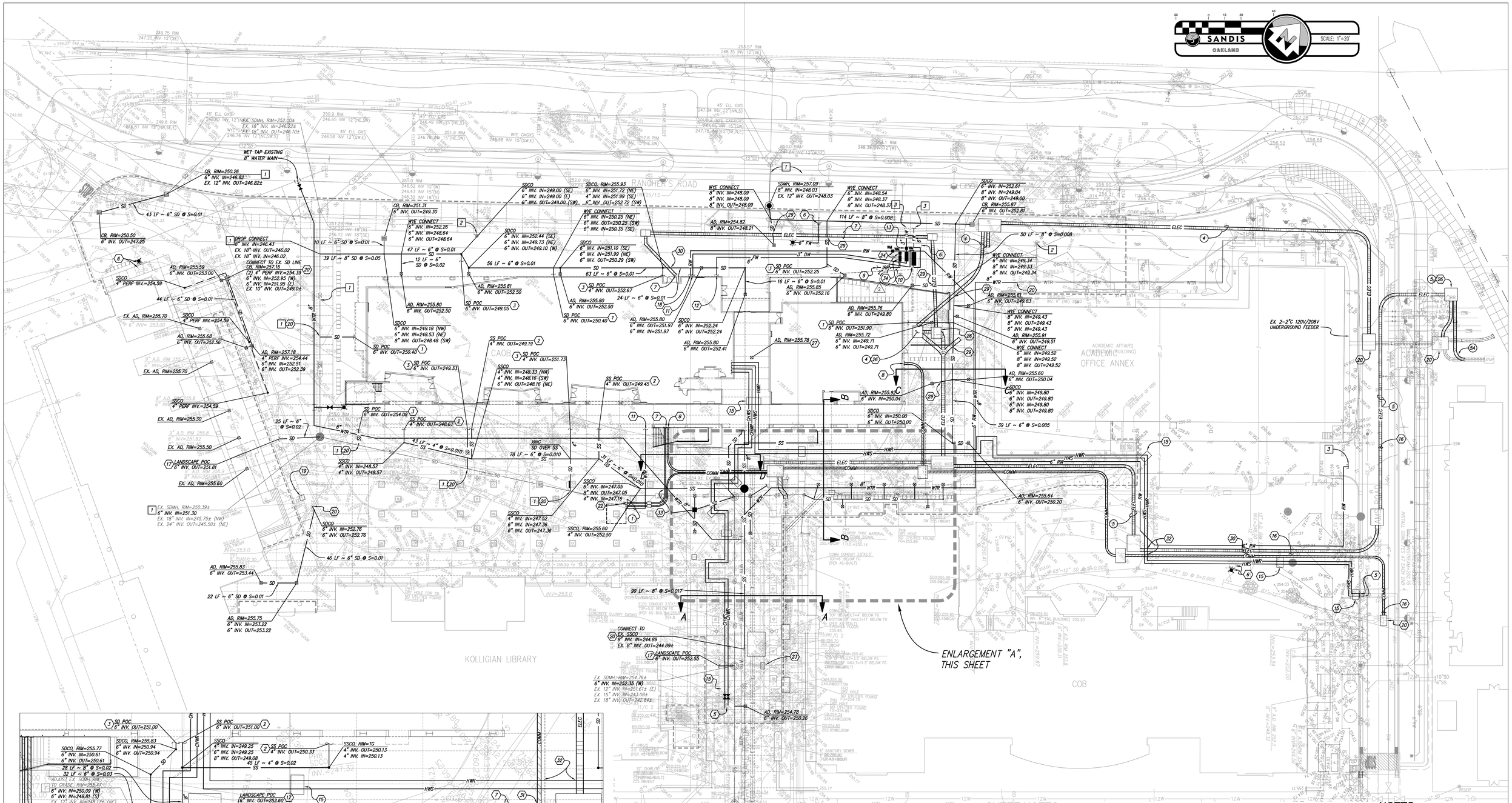

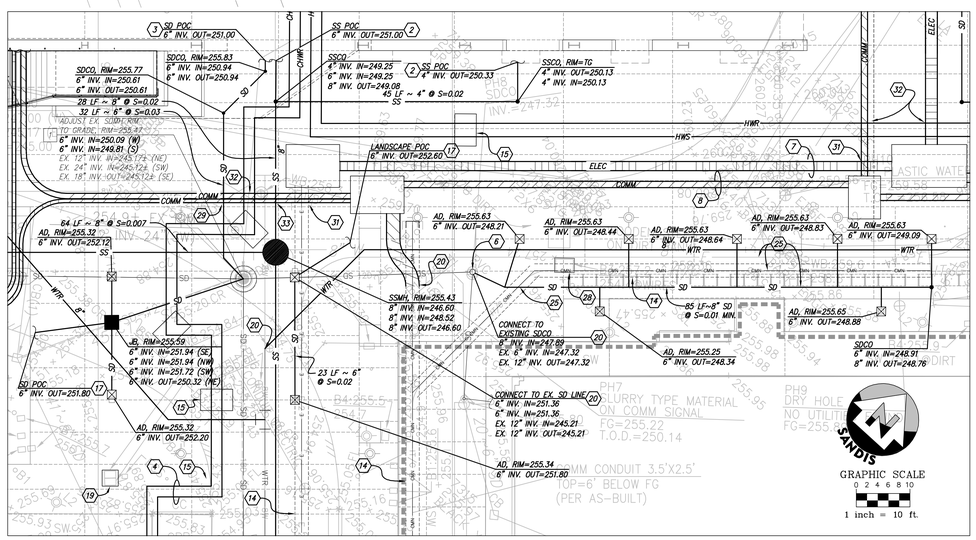

ENLARGEMENT "A"

SCALE: 1"=10'

SHEET NOTES

1. FOUNDATION DRAIN P.O.C. SEE ARCHITECTURAL AND STRUCTURAL PLANS FOR CONTINUATION.
2. SS P.O.C. SEE MEP PLANS FOR CONTINUATION.
3. RAIN WATER LEADER P.O.C., SEE MEP PLANS FOR ACTUAL LOCATION.
4. NEW 4" CHWS/R, SEE MEP PLANS.
5. CONNECT TO EXISTING CHWS/R AND HHWS/R LINES.
6. RELOCATE EX. FIRE HYDRANT AS NECESSARY TO AVOID NEW SIDEWALK OR UTILITIES.
7. PROPOSED ELECTRICAL ROUTING AND VAULTS. SEE MEP PLANS.
8. PROPOSED COMM ROUTING AND VAULTS. SEE MEP PLANS.
9. IRRIGATION P.O.C. SEE LANDSCAPE PLANS FOR CONTINUATION.
10. BACKFLOW PREVENTION DEVICE WITH FDC, SEE DETAIL B, ON SHEET C5.01. CONNECT TAMPER SWITCH TO BUILDING FIRE ALARM CONTROL PANEL, SEE MEP.
11. DOMESTIC WATER P.O.C. SEE MEP PLANS FOR CONTINUATION.
12. FIRE WATER P.O.C. SEE MEP PLANS FOR CONTINUATION.
13. DOMESTIC WATER METER, TURBO 3" BADGER RECORDALL RECYCLED WATER METER WITH STRAINER AND ABSOLUTE DIGITAL ENCODER, BADGER 308 IN-LINE CONNECTOR, AND AQUACUE BARNACLE WIRELESS MONITORING SYSTEM INTEGRATED TO WORK WITH CAMPUS SYSTEM.
14. VERIFY LOCATION OF UTILITIES WHICH MAY HAVE BEEN INSTALLED AS PART OF PHASE 3 WORK. CONTRACTOR SHALL POTHOLE UTILITY AND REPORT FINDINGS TO ENGINEER.
15. ANCHOR BLOCKS FOR THERMAL EXPANSION. SEE MEP PLANS.
16. RESTORE SURFACE IN-KIND AFTER UTILITY INSTALLATION.
17. LANDSCAPE SUB-DRAIN P.O.C. SEE LANDSCAPE PANS.
18. 6" RECYCLED WATER CONNECTION. SEE MEP PLANS.
19. RELOCATED BLUE EMERGENCY PHONE. SEE MEP PLANS.
20. CONNECT TO EXISTING UTILITY LINE OR VAULT. CONTRACTOR TO FIELD VERIFY INVERT ELEVATION PRIOR TO CONSTRUCTION AND REPORT TO ENGINEER ANY DISCREPANCIES.
21. CONNECT TO EXISTING UTILITY VAULT. SEE MEP PLANS.
22. CONNECT STORM DRAIN FOR FUTURE KIOSOK TO STUB-OUT PROVIDED BY PHASE 4 UTILITIES.
23. RAISE EX. STRUCTURE TO FINISH GRADE AND REPLACE EXISTING GRATE WITH STEEL CHECKER PLATE MARKED "STORM DRAIN".
24. IRRIGATION WATER METER, TURBO 2" BADGER RECORDALL RECLAIMED WATER METER WITH STRAINER AND ABSOLUTE DIGITAL ENCODER, BADGER 308 IN-LINE CONNECTOR, AND AQUACUE BARNACLE WIRELESS MONITORING SYSTEM INTEGRATED TO WORK WITH CAMPUS SYSTEM.
25. EXISTING COMM AND ELEC LINES ASSUMED TO BE AT 36-INCHES BELOW GRADE. PRIOR TO CONSTRUCTION CONTRACTOR TO VERIFY ELEVATIONS OF EXISTING UTILITIES AND ADJUST PROPOSED STORM DRAIN LINE AS NECESSARY TO CLEAR EXISTING UTILITIES. STORM DRAIN LINES TO HAVE A MINIMUM 1% SLOPE AND MINIMUM COVER OF 2.5-FEET.
26. TRANSFORMER PADS PER STRUCTURAL DETAIL 10 ON SHEET S3.02. PADS TO EXTEND 6" BEYOND PERIMETER OF EQUIPMENT. PAD ELEVATION TO BE 3" TO 4" ABOVE FINISHED GRADE. DIMENSIONS ARE NOMINAL ONLY AND CONTRACTOR IS RESPONSIBLE FOR EXACT LOCATION AND SIZE DEPENDING ON EQUIPMENT SUBMITTALS AND LAYOUT SHOP DRAWINGS.
27. SD AREA DRAIN, SEE MEP PLANS FOR CONTINUATION.
28. ADJUST EXISTING UTILITY STRUCTURE TO GRADE.
29. UTILITY CROSSING, ELEC/COMM OVER STORM DRAIN.
30. UTILITY CROSSING, STORM DRAIN OVER ELEC/COMM.
31. UTILITY CROSSING, COMM OVER ELEC.
32. UTILITY CROSSING, COMM/ELEC OVER HYDRONICS.
33. UTILITY CROSSING, COMM/ELEC OVER SANITARY SEWER.
34. IRRIGATION BACKFLOW ASSEMBLY AND ENCLOSURE. SEE DETAIL 10, SHEET C5.02 AND DETAIL 3, SHEET L2.02.

PHASE 4 COORDINATION

1. MAIN STORM DRAIN LINE INSTALLED AS PART OF THE PHASE 4 INFRASTRUCTURE PROJECT. CONTRACTOR TO CONFIRM ACTUAL LOCATION AND INVERT ELEVATION PRIOR TO CONSTRUCTION AND REPORT TO ENGINEER ANY DISCREPANCIES.
2. FIRE HYDRANT INSTALLED BY PHASE 4 PROJECT. ADJUST TO FINISH GRADE AS NECESSARY.
3. DOMESTIC, FIRE WATER AND RECYCLED WATER LINES INSTALLED AND STUBBED AS PART OF PHASE 4 CONSTRUCTION.

NOTES

A. EXISTING UTILITIES SHOWN ARE APPROXIMATE. CONTRACTOR TO VERIFY ACTUAL LOCATION AND INVERT ELEVATION PRIOR TO CONSTRUCTION AND REPORT TO ENGINEER ANY DISCREPANCIES.

B. CORROSION PROTECTION FOR PIPELINE AND CONDUITS BELOW GRADE TO BE PER THE GEOTECHNICAL REPORT.

C. ALL FIRE WATER LINE TO BE MECHANICALLY RESTRAINED.

D. DOMESTIC, IRRIGATION, AND RECYCLED WATER LINES TO BE EITHER MECHANICALLY RESTRAINED JOINTS OR THRUST BLOCKS, PER CONTRACTORS PREFERENCE.

E. PHASE 4 UTILITIES ARE SHOWN SCREENED FOR REFERENCE ONLY.

F. SEE SHEET C4.02 FOR UTILITY SECTIONS.

G. WATER LINE SHUT DOWNS NOT TO EXCEED 8 HOURS. SCHEDULE FOR MINIMUM DISTURBANCE OF CAMPUS OPERATIONS.

ADD ALTERNATIVES

4. PROPOSED ELECTRICAL ROUTING AND VAULTS FOR FUTURE USE. SEE MEP PLANS.
5. PROPOSED ELECTRICAL ROUTING AND VAULTS FOR FUTURE USE. SEE MEP PLANS.

5A. PROPOSED ELECTRICAL ROUTING AND VAULTS FOR FUTURE USE. SEE MEP PLANS.

DEDUCTION ALTERNATIVES

1. STUB OUT DOMESTIC WATER, STORM DRAIN, SANITARY SEWER, ELECTRICAL & COMM CONDUIT FOR FUTURE KIOSK. SEE MEP PLANS.

Solomon Cordwell Buenz
www.scb.com
Chicago 312.896.1100
San Francisco 415.216.2450
Architecture Planning Interior Design

SANDIS CIVIL ENGINEERS SURVEYORS PLANNERS
436 14th Street | Oakland, CA 94612 | P. 510.873.8166 | www.sandis.net
SUNNYVALE ROSEVILLE OAKLAND

REGISTERED PROFESSIONAL ENGINEER JEFFREY MICHAEL SEFERS NO. 62783 Exp. 6/30/14 CIVIL STATE OF CALIFORNIA

UNIVERSITY OF CALIFORNIA
MERCED
FIRE MARSHAL
Approval of this plan does not authorize or approve any omission or deviation from applicable regulations. Final approval is subject to field inspection Once set of approved plans shall be available on the Project site at all times.
Reviewed for: _____
Date: _____
UCM Project #: 390290

NO.	DATE	DESCRIPTION
2	02.27.2014	ADDENDUM #2
	12.20.2013	100% CONSTRUCTION DOCUMENTS
	10.21.2013	90% CONSTRUCTION DOCUMENTS
	04.15.2013	100% DESIGN DEVELOPMENT
	01.28.2013	100% SCHEMATIC DESIGN

CLASSROOM AND ACADEMIC OFFICE BUILDING
Merced, California
UCMERCED

© 2012 Solomon Cordwell Buenz

UTILITY PLAN

Scale: 1"=20'
Drawn By: RAB/SEC
Project Number: 2012040
Sheet Number: C4.01

File: X:\P\612049\PLAN SETS\C4.01.dwg Date:Feb 26, 2014

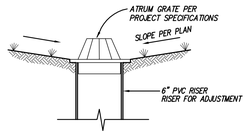

LANDSCAPE DRAIN

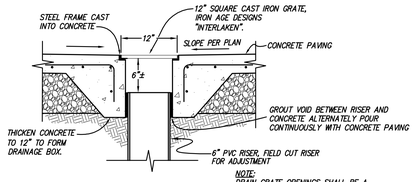

NOTE:
DRAIN GRATE OPENINGS SHALL BE A MAXIMUM OF 1/2" WIDE. ORIENT OPENINGS PERPENDICULAR TO THE FLOW OF TRAFFIC.

HARDSCAPE DRAIN

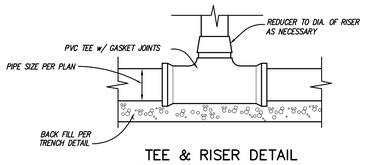

TEE & RISER DETAIL

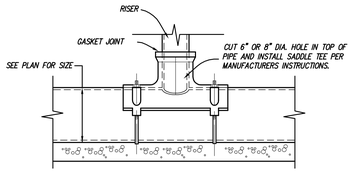

SADDLE & RISER DETAIL

AREA DRAIN 1
N.T.S.

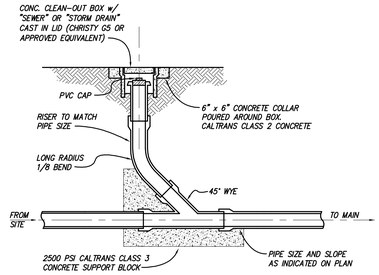

CLEANOUT WITH LATERAL STUB 3
N.T.S.

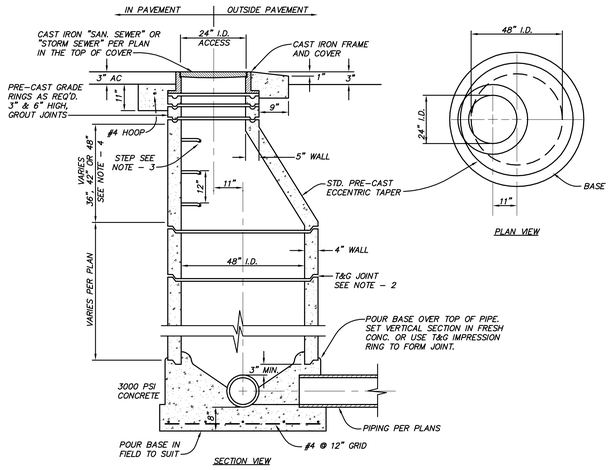

NOTES:
1. PRE-CAST MANHOLE MATERIAL SHALL BE MANUFACTURED TO ASTM SPECIFICATION C478.
2. GROUT JOINTS WITH 1:3 MORTAR MIX OR USE RAM-NEK JOINT COMPOUND.
3. USE POLY COATED STEPS, 3/4" DIA. GALV. STEEL STEPS ARE SPACED 12" O.C. VERTICALLY AND 6" FROM JOINTS. SEE LOCAL CODE FOR USE OF STEPS.
4. A 36" TAPER MAY BE COMBINED WITH A 12" VERTICAL TO FORM A 48" TAPER SECTION.
5. ALL CONCRETE JOINTS SHALL BE LEAKED, WETTED, AND MORTARED PRIOR TO SETTING THE NEXT SECTION THE JOINTS SHALL BE PACKED, TROWELLED AND BRUSHED WHILE THE MORTAR IS PLASTIC.
6. MANHOLE SHALL BE SET TO GRADE SUBSEQUENT TO PLACING AC OR RCC.
7. XYPEX CONCENTRATE/CRYSTALLINE COATING ON INTERIOR CONCRETE SURFACES.
8. STEPS NOT REQUIRED IN MANHOLES 3.5 FEET OR LESS IN DEPTH.

TYPICAL MANHOLE DETAIL 4
N.T.S.

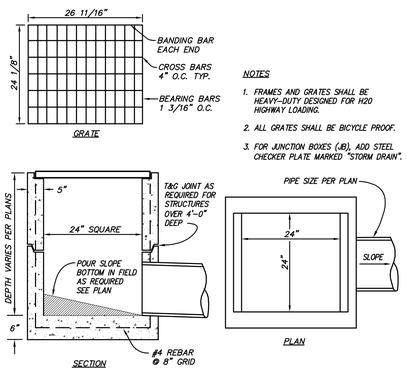

NOTES
1. FRAMES AND GRATES SHALL BE HEAVY-DUTY DESIGNED FOR H20 HIGHWAY LOADING.
2. ALL GRATES SHALL BE BICYCLE PROOF.
3. FOR JUNCTION BOXES (JB), ADD STEEL CHECKER PLATE MARKED "STORM DRAIN".

24" CATCH BASIN DETAIL 2
N.T.S.

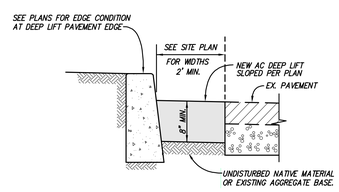

AC DEEP LIFT 5
N.T.S.

2

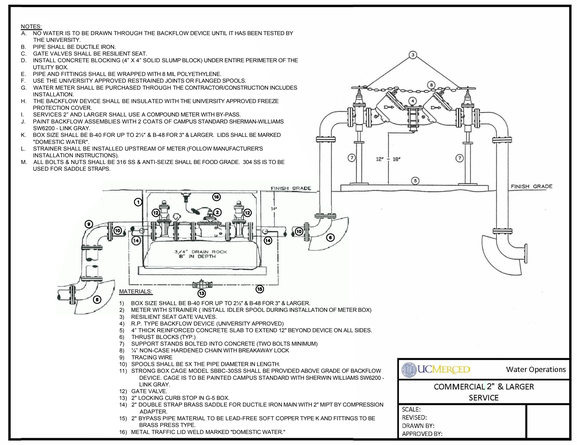

NOTES:
A. NO WATER IS TO BE DRAWN THROUGH THE BACKFLOW DEVICE UNTIL IT HAS BEEN TESTED BY THE UNIVERSITY.
B. PIPE SHALL BE DUCTILE IRON.
C. GATE VALVES SHALL BE RESILIENT SEAT.
D. INSTALL CONCRETE BLOCKING (4' X 4' SOLID SLUMP BLOCK) UNDER ENTIRE PERIMETER OF THE UTILITY BOX.
E. PIPE AND FITTINGS SHALL BE WRAPPED WITH 8 MIL POLYETHYLENE.
F. USE THE UNIVERSITY APPROVED RESTRAINED JOINTS OR FLANGED SPOOLS.
G. WATER METER SHALL BE PURCHASED THROUGH THE CONTRACTOR/CONSTRUCTION INCLUDES INSTALLATION.
H. THE BACKFLOW DEVICE SHALL BE INSULATED WITH THE UNIVERSITY APPROVED FREEZE PROTECTION COVER.
I. SERVICES 2" AND LARGER SHALL USE A COMPOUND METER WITH BY-PASS.
J. PAINT BACKFLOW ASSEMBLIES WITH 2 COATS OF CAMPUS STANDARD SHERMAN-WILLIAMS SW6200 - LINK GRAY.
K. BOX SIZE SHALL BE B-40 FOR UP TO 2½" & B-48 FOR 3" & LARGER. LIDS SHALL BE MARKED "DOMESTIC WATER"
L. STRAINER SHALL BE INSTALLED UPSTREAM OF METER (FOLLOW MANUFACTURER'S INSTALLATION INSTRUCTIONS).
M. ALL BOLTS & NUTS SHALL BE 316 SS & ANTI-SEIZE SHALL BE FOOD GRADE. 304 SS IS TO BE USED FOR SADDLE STRAPS.

MATERIALS:
1) BOX SIZE SHALL BE B-40 FOR UP TO 2½" & B-48 FOR 3" & LARGER.
2) METER WITH STRAINER (INSTALL IDLER SPOOL DURING INSTALLATION OF METER BOX)
3) RESILIENT SEAT GATE VALVES.
4) R.P. TYPE BACKFLOW DEVICE (UNIVERSITY APPROVED)
5) 4" THICK REINFORCED CONCRETE SLAB TO EXTEND 12" BEYOND DEVICE ON ALL SIDES.
6) THRUST BLOCKS (TYP.)
7) SUPPORT STANDS BOLTED INTO CONCRETE (TWO BOLTS MINIMUM)
8) ½" NON-CASE HARDENED CHAIN WITH BREAKAWAY LOCK
9) TRACING WIRE
10) SPOOLS SHALL BE 5X THE PIPE DIAMETER IN LENGTH.
11) STRONG BOX CAGE MODEL SBBC-3055 SHALL BE PROVIDED ABOVE GRADE OF BACKFLOW DEVICE. CAGE IS TO BE PAINTED CAMPUS STANDARD WITH SHERWIN WILLIAMS SW6200 - LINK GRAY.
12) GATE VALVE.
13) 2" DUCKBILL CURB STOP IN G-5 BOX.
14) 2" DOUBLE STRAP BRASS SADDLE FOR DUCTILE IRON MAIN WITH 2" MIPT BY COMPRESSION ADAPTER.
15) 2" BYPASS PIPE MATERIAL TO BE LEAD-FREE SOFT COPPER TYPE K AND FITTINGS TO BE BRASS PRESS TYPE.
16) METAL TRAFFIC LID WELD MARKED "DOMESTIC WATER."

UCMERCED Water Operations
COMMERCIAL 2" & LARGER SERVICE
SCALE:
REVISED:
DRAWN BY:
APPROVED BY:

COMMERCIAL 2" & LARGER SERVICE 6
N.T.S.

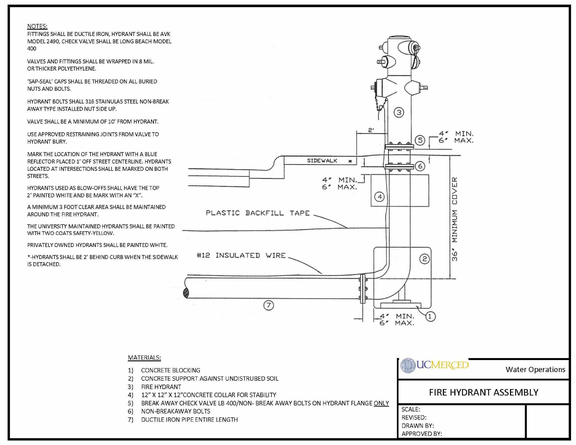

NOTES:
FITTINGS SHALL BE DUCTILE IRON, HYDRANT SHALL BE AVK MODEL 2490, CHECK VALVE SHALL BE LONG BEACH MODEL 400

VALVES AND FITTINGS SHALL BE WRAPPED IN 8 MIL. OR THICKER POLYETHYLENE.

"SAP-SEAL" CAPS SHALL BE THREADED ON ALL BURIED NUTS AND BOLTS.

HYDRANT BOLTS SHALL 316 STAINLIAS STEEL NON-BREAK AWAY TYPE INSTALLED NUT SIDE UP.

VALVE SHALL BE A MINIMUM OF 10' FROM HYDRANT.

USE APPROVED RESTRAINING JOINTS FROM VALVE TO HYDRANT BURY.

MARK THE LOCATION OF THE HYDRANT WITH A BLUE REFLECTOR PLACED 1' OFF STREET CENTERLINE. HYDRANT'S LOCATED AT INTERSECTIONS SHALL BE MARKED ON BOTH STREETS.

HYDRANT'S USED AS BLOW-OFFS SHALL HAVE THE TOP 2' PAINTED WHITE AND BE MARK WITH AN "S".

A MINIMUM 3 FOOT CLEAR AREA SHALL BE MAINTAINED AROUND THE FIRE HYDRANT.

THE UNIVERSITY MAINTAINED HYDRANTS SHALL BE PAINTED WITH TWO COATS SAFETY YELLOW.

PRIVATELY OWNED HYDRANTS SHALL BE PAINTED WHITE.

* HYDRANTS SHALL BE 2' BEHIND CURB WHEN THE SIDEWALK IS DETACHED.

MATERIALS:
1) CONCRETE BLOCKING
2) CONCRETE SUPPORT AGAINST UNDISTRUSED SOIL
3) FIRE HYDRANT
4) 12" X 12" X 12" CONCRETE COLLAR FOR STABILITY
5) BREAK AWAY CHECK VALVE LB 400/NON- BREAK AWAY BOLTS ON HYDRANT FLANGE ONLY
6) NON-BREAKAWAY BOLTS
7) DUCTILE IRON PIPE ENTIRE LENGTH

UCMERCED Water Operations
FIRE HYDRANT ASSEMBLY
SCALE:
REVISED:
DRAWN BY:
APPROVED BY:

FIRE HYDRANT ASSEMBLY 7
N.T.S.

2

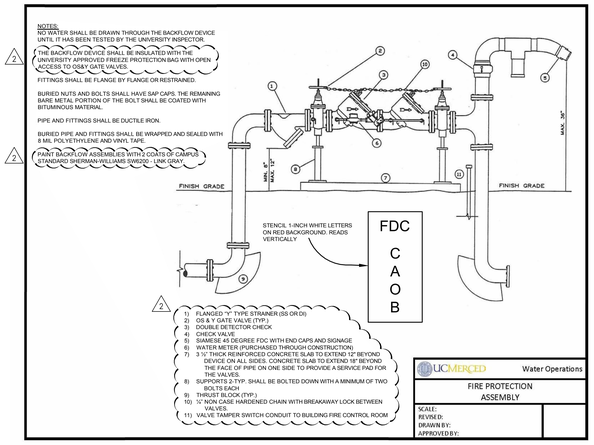

NOTES:
NO WATER SHALL BE DRAWN THROUGH THE BACKFLOW DEVICE UNTIL IT HAS BEEN TESTED BY THE UNIVERSITY INSPECTOR.

2 THE BACKFLOW DEVICE SHALL BE INSULATED WITH THE UNIVERSITY APPROVED FREEZE PROTECTION BAG WITH OPEN ACCESS TO OS&Y GATE VALVES.

FITTINGS SHALL BE FLANGE BY FLANGE OR RESTRAINED.

BURIED NUTS AND BOLTS SHALL HAVE SAP CAPS. THE REMAINING BARE METAL PORTION OF THE BOLT SHALL BE COATED WITH BITUMINOUS MATERIAL.

PIPE AND FITTINGS SHALL BE DUCTILE IRON.

BURIED PIPE AND FITTINGS SHALL BE WRAPPED AND SEALED WITH 8 MIL POLYETHYLENE AND VINYL TAPE.

2 PAINT BACKFLOW ASSEMBLIES WITH 2 COATS OF CAMPUS STANDARD SHERMAN-WILLIAMS SW6200 - LINK GRAY.

2
1) FLANGED "Y" TYPE STRAINER (SS OR DI)
2) OS & Y GATE VALVE (TYP.)
3) DOUBLE DETECTOR CHECK
4) CHECK VALVE
5) SIAMESE 45 DEGREE FDC WITH END CAPS AND SIGNAGE
6) WATER METER (PURCHASED THROUGH CONSTRUCTION)
7) 3 ½" THICK REINFORCED CONCRETE SLAB TO EXTEND 12" BEYOND DEVICE ON ALL SIDES. CONCRETE SLAB TO EXTEND 18" BEYOND THE FACE OF PIPE ON ONE SIDE TO PROVIDE A SERVICE PAD FOR THE VALVES.
8) SUPPORTS 2-TYP. SHALL BE BOLTED DOWN WITH A MINIMUM OF TWO BOLTS EACH
9) THRUST BLOCK (TYP.)
10) ½" NON CASE HARDENED CHAIN WITH BREAKAWAY LOCK BETWEEN VALVES.
11) VALVE TAMPER SWITCH CONDUIT TO BUILDING FIRE CONTROL ROOM

UCMERCED Water Operations
FIRE PROTECTION ASSEMBLY
SCALE:
REVISED:
DRAWN BY:
APPROVED BY:

FIRE PROTECTION ASSEMBLY 8
N.T.S.

THRUST BLOCK TABLE						
TYPE OF FITTING		90° BEND & BURIES	45° BEND	22 1/2° BEND	11 1/4° BEND	TEE OR DEAD END
TYPICAL PLAN VIEW						
REQUIRED BEARING TOTAL AREA IN SQUARE FEET						
Pipe Size	4"	2.6	1.4	0.8	0.4	1.9
	6"	5.3	2.9	1.5	0.8	3.8
	8"	9.1	5.0	2.6	1.3	6.5
	10"	13.7	7.5	3.8	1.9	9.7
	12"	19.4	10.5	5.4	2.7	13.7

THRUST BLOCK NOTES
1. Thrust blocks to be constructed of 2500 Class 3 Caltrans concrete.
2. Blocks to be poured against undisturbed soil.
3. Joints to be kept free of concrete. Allow working room.
4. Abrupt changes in vertical alignment shall be anchored per gravity block detail.
5. Areas given are for PVC C900 class 200 pipe at a static test pressure of 200 psi in soil with 2,000 psf bearing capacity. Subject to field conditions.
6. Tapping sleeves shall have thrust blocks sized the same as tees.

THRUST BLOCK DETAIL 9
N.T.S.

THRUST CALCULATION TABLE						
TYPE OF FITTING		90° BEND & BURIES	45° BEND	22 1/2° BEND	11 1/4° BEND	TEE OR DEAD END
TYPICAL PLAN VIEW						
THRUST FORCE T, IN POUNDS						
Pipe Size	4"	5120	2770	1415	710	3620
	6"	10580	5725	2920	1470	7480
	8"	18200	9850	5020	2525	12865
	10"	27370	14815	7555	3795	19355
	12"	38710	20950	10680	5370	27370

THRUST CALCULATION NOTES
1. CALCULATIONS BASED ON NFPA 24, TABLE A-8-6.2, 2000 EDITION
2. THRUST CALCULATED FOR 200 PSI STATIC PRESSURE

THRUST CALCULATIONS 10
N.T.S.

GRAVITY BLOCK TABLE				
TYPE OF FITTING		45° BEND	22 1/2° BEND	11 1/4° BEND
TYPICAL ELEVATION VIEW				
REQUIRED BLOCK VOLUME IN CUBIC FEET				
Pipe Size	4"	20.5	11.1	6.7
	6"	42.3	22.9	11.7
	8"	72.8	39.4	20.1
	10"	109.5	59.3	30.2

GRAVITY BLOCK NOTES
1. Gravity blocks to be constructed of 5 sack concrete.
2. Blocks to be poured against undisturbed soil or fill compacted to 90% relative compaction.
3. Joints to be kept free of concrete. Allow working room.
4. Changes in vertical alignment shall be anchored.
5. Areas given are for PVC C900 class 200 pipe at a static test pressure of 200 psi in soil with 1,400 psf bearing capacity and a safety factor of 1.2. Subject to field conditions.

GRAVITY BLOCK DETAIL 11
N.T.S.

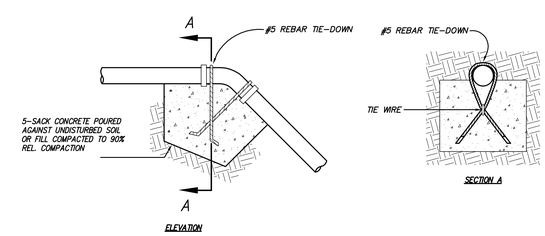

GRAVITY BLOCK DETAIL 12
N.T.S.

Solomon Cordwell Buenz
www.scb.com
Chicago 312.896.1100
San Francisco 415.216.2450
Architecture Planning Interior Design

SANDIS CIVIL ENGINEERS SURVEYORS PLANNERS
436 Ninth Street | Oakland, CA 94607 | P: 510.272.0950 | www.sandis.net
SUNNYVALE ROSEVILLE OAKLAND

REGISTERED PROFESSIONAL ENGINEER JEFFREY MICHAEL SEVERN NO. 62793 Exp. 6/30/14 CIVIL STATE OF CALIFORNIA

UNIVERSITY OF CALIFORNIA
MERCED
FIRE MARSHAL
Approval of this plan does not authorize or approve any violations of any laws or rules or regulations. Final approval is subject to field inspection One set of approved plans shall be available on the Project site at all times.
Reviewed by: _____
Date: _____
UCM Project #: 2012040

NO.	DATE	DESCRIPTION	NO.	DATE	DESCRIPTION
2	02.27.2014	ADDENDUM #2			
	12.20.2013	100% CONSTRUCTION DOCUMENTS			
	10.21.2013	90% CONSTRUCTION DOCUMENTS			
	04.15.2013	100% DESIGN DEVELOPMENT			
	01.28.2013	100% SCHEMATIC DESIGN			

CLASSROOM AND ACADEMIC OFFICE BUILDING
Merced, California
UCMERCED

© 2012 Solomon Cordwell Buenz

CONSTRUCTION DETAILS

Scale: N.T.S.
Drawn By: RAB/SEC
Project Number: 2012040
Sheet Number: C5.01

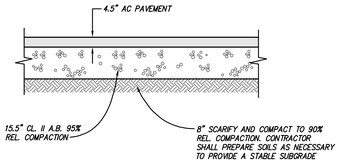

VEHICULAR ASPHALT PAVEMENT SECTION (1)
N.T.S.

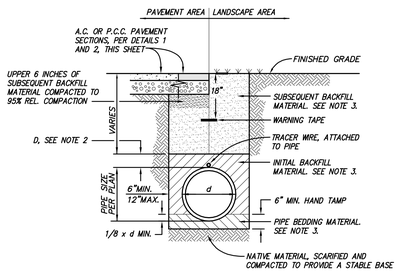

GENERAL TRENCHING

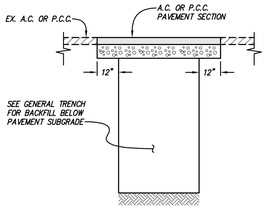

TRENCHING WITHIN EX. HARDSCAPE

NOTE:
1. PLACE CUT OFF PLUG OF IMPERMEABLE MATERIAL WHERE ALL TRENCHES ENTER A PAVEMENT AREA.
2. D=6" MIN. FOR PIPE SIZES ≤ 12 INCHES
   D=12" MIN. FOR PIPE SIZES > 12 INCHES
3. COMPACT BACKFILL AND BEDDING MATERIALS TO THE FOLLOWING PERCENT RELATIVE COMPACTION:

COMPACTION REQUIREMENTS

	TRENCH SAND	TRENCH GRAVEL	APPROVED NATIVE	IMPORTED FILL	CLASS II AGGREGATE BASE
SUBSEQUENT BACKFILL MATERIAL (UNDER PAVEMENT)	N/A	N/A	90%	90%	90%
SUBSEQUENT BACKFILL MATERIAL (IN LANDSCAPE)	N/A	N/A	85%	85%	85%
INITIAL BACKFILL MATERIAL	90%	N/A	N/A	N/A	N/A
BEDDING MATERIAL	90%	90%	N/A	N/A	N/A

TRENCH DETAIL (2)
N.T.S.

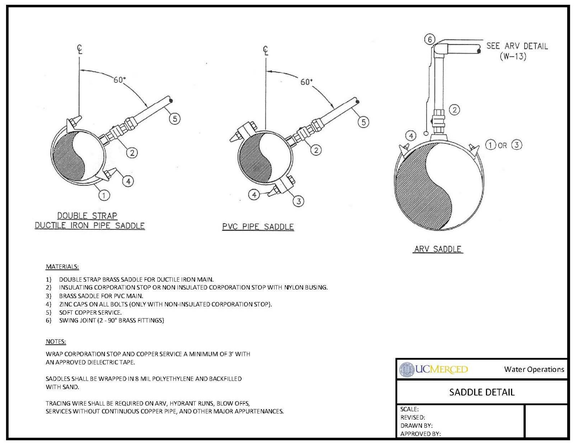

SADDLE DETAIL (5)
N.T.S.

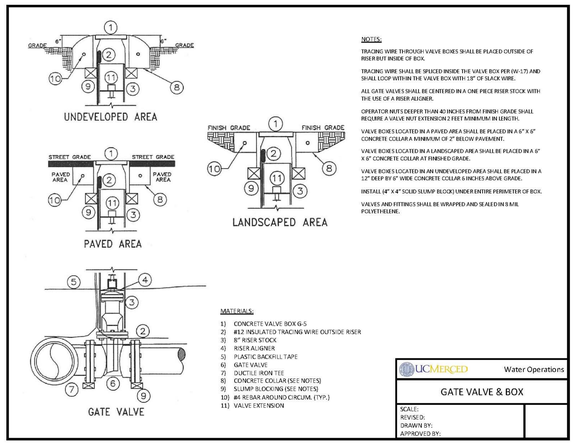

GATE VALVE & BOX (8)
N.T.S.

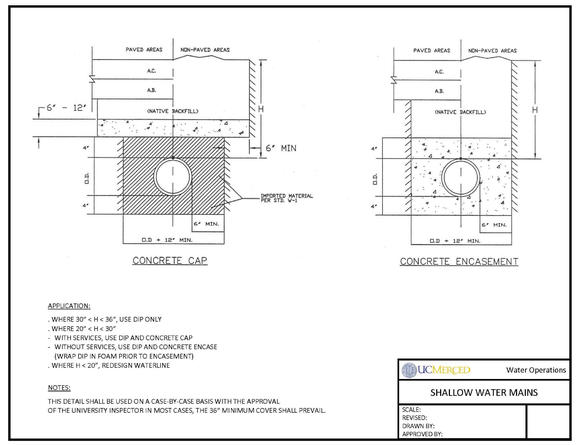

SHALLOW WATER MAINS (6)
N.T.S.

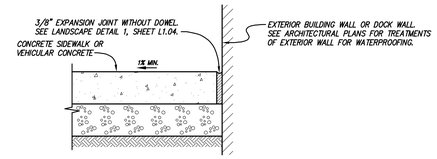

CONCRETE EDGE @ BLDG FACE

CONCRETE EDGE DETAILS (9)
N.T.S.

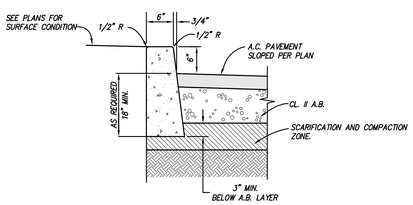

6" VERTICAL CURB (3)
N.T.S.

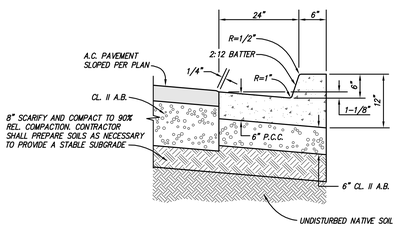

6" CURB AND 24" GUTTER (4)
N.T.S.

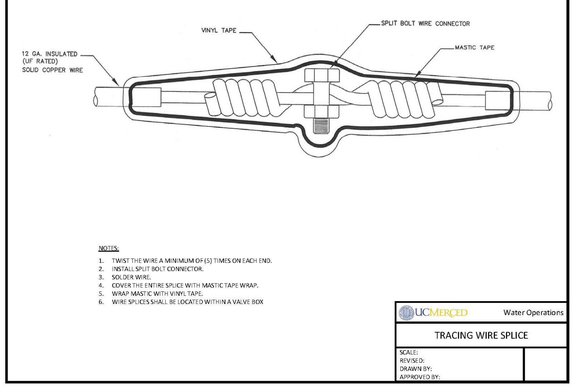

TRACING WIRE SPLICE (7)
N.T.S.

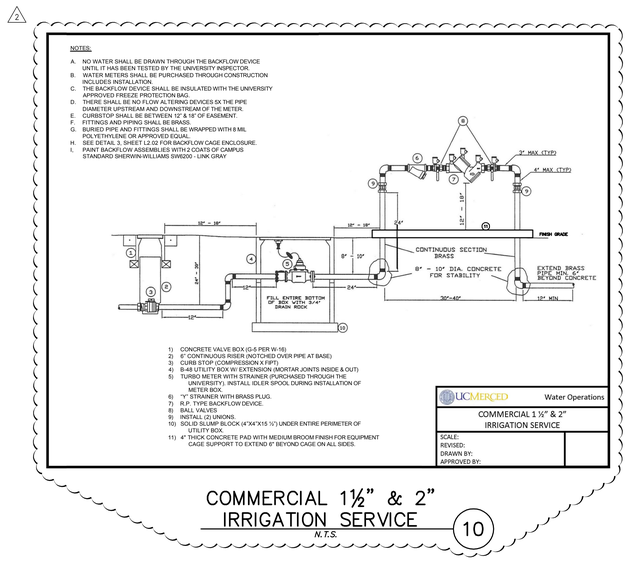

COMMERCIAL 1½" & 2" IRRIGATION SERVICE (10)
N.T.S.

Solomon Cordwell Buenz
www.scb.com
Chicago 312.896.1100
San Francisco 415.216.2450
Architecture Planning Interior Design

SANDIS CIVIL ENGINEERS SURVEYORS PLANNERS
436 14th Street | Oakland, CA 94612 | P: 510.839.9950 | www.sandis.net
SUNNYVALE ROSEVILLE OAKLAND
REGISTERED PROFESSIONAL ENGINEER JEFFREY MICHAEL SEFERIAN NO. 62793 Exp. 6/30/14 CIVIL STATE OF CALIFORNIA

UNIVERSITY OF CALIFORNIA MERCED FIRE MARSHAL
Approval of this plan does not authorize or approve violations of any applicable codes, laws, or regulations. Final approval is subject to field inspection One set of approved plans shall be available on the Project site at all times.
Reviewed by: _____
Date: _____
UCM Project #: 300206

NO.	DATE	DESCRIPTION
2	02.27.2014	ADDENDUM #2
	12.20.2013	100% CONSTRUCTION DOCUMENTS
	10.21.2013	90% CONSTRUCTION DOCUMENTS
	04.15.2013	100% DESIGN DEVELOPMENT
	01.28.2013	100% SCHEMATIC DESIGN

CLASSROOM AND ACADEMIC OFFICE BUILDING
Merced, California
UCMERCED

© 2012 Solomon Cordwell Buenz

CONSTRUCTION DETAILS

Scale: N.T.S.
Drawn By: RAB/SEC
Project Number: 2012040
Sheet Number: C5.02

NOTE: DETAIL NOT USED.
SEE CAMPUS STANDARD
IRRIGATION WATER SERVICE
DETAIL 10/C5.02

IMPERIAL ASSEMBLY WITH CONCRETE BASE

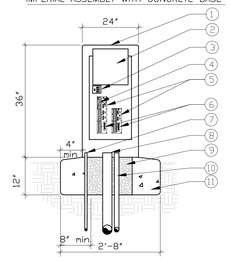

* NOTE ALL GROUNDING REQUIREMENTS FOR CONTROLLER ASSEMBLIES SHALL CONFORM TO LOCAL ELECTRICAL CODES.

1. IMPERIAL ASSEMBLIES 24" FRONT ENTRY CONTROLLER ASSEMBLY NEMA 3R RAINPROOF ENCLOSURE (UL LISTED).
2. CONTROLLER.
3. POWER SWITCH/GFI RECEPTACLE.
4. MASTER VALVE RELAY ASSEMBLY OR PUMP START RELAY ASSEMBLY (OPTIONAL).
5. TERMINAL BOARD.
6. REMOTE RECEIVER CONNECTOR (OPTIONAL).
7. 1" PVC CONDUIT FOR 120 VAC FROM METERED POWER SUPPLY.
8. PVC CONDUIT FOR CONTROL WIRES, SIZE AS REQUIRED.
9. FILL VOIDS WITH 3/8" PEA GRAVEL.
10. 1" PVC CONDUIT FOR FLOW SENSOR CABLE PAIGE CABLE P – 7162 – D (IF APPLICABLE).
11. POURED CONCRETE BASE.

NOTES:
1. INSTALL A FREEZE PREVENTATIVE BLANKET AROUND BACKFLOW ASSEMBLY. BLANKET SHALL BE GREEN AND MANUFACTURED BY STRONGBOX.
2. DO NOT SOLDER CONNECT FITTINGS WHILE THREADED INTO BACKFLOW ASSEMBLY. DAMAGE MAY OCCUR.
3. NIPPLES AND FITTINGS TO BE SAME IPT SIZE AS BACKFLOW ASSEMBLY.
4. PROVIDE A STRONG BOX SBBC–30SS OR ACCEPTED EQUAL 32"x 30"x 18" BACKFLOW PREVENTER ENCLOSURE TO COMPLETELY ENCLOSE DEVICE. INSTALL ENCLOSURE TO CONCRETE BASE AS DIRECTED BY MANUFACTURER.

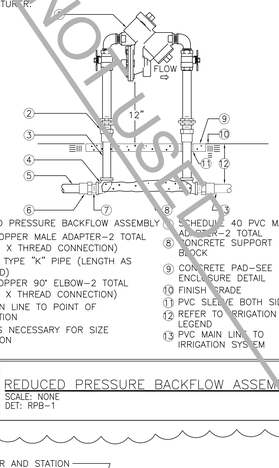

1. REDUCED PRESSURE BACKFLOW ASSEMBLY
2. WROT COPPER MALE ADAPTER–2 TOTAL (SOLDER X THREAD CONNECTION)
3. COPPER TYPE "K" PIPE (LENGTH AS REQUIRED)
4. WROT COPPER 90° ELBOW–2 TOTAL (SOLDER X THREAD CONNECTION)
5. PVC MAIN LINE TO POINT OF CONNECTION
6. BUSH AS NECESSARY FOR SIZE TRANSITION
7. SCHEDULE 40 PVC MALE ADAPTER–2 TOTAL
8. CONCRETE SUPPORT BLOCK
9. CONCRETE PAD–SEE ENCLOSURE DETAIL
10. FINISH GRADE
11. PVC SLEEVE BOTH SIDES
12. REFER TO IRRIGATION LEGEND
13. PVC MAIN LINE TO IRRIGATION SYSTEM

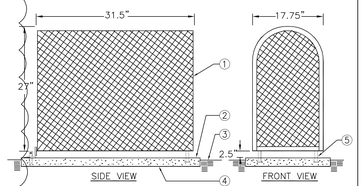

1. POWDER COATED STEEL ENCLOSURE. COLOR SHOULD BY THE FOLLOWING:
   MANUFACTURE: TIGER DRYLAC
   DRYLAC: 49/72530
   COLOR: RAL 7023 SM GL TRIBO
2. SET PAD 1/2" ABOVE FINISH GRADE
3. FINISH GRADE
4. 6" THICK CLASS "B" CONCRETE PAD FOR ENCLOSURE SUPPORT TO EXTEND 6" BEYOND ENCLOSURE ON ALL SIDES. CONCRETE TO HAVE MEDIUM BROOM FINISH.
5. MOUNTING BRACKETS (STANDARD WITH ENCLOSURE) TO BE SET INTO CONCRETE PAD. PROVIDE LOCKING TAB TO ACCEPT PADLOCK PER MANUFACTURE'S INSTRUCTION.

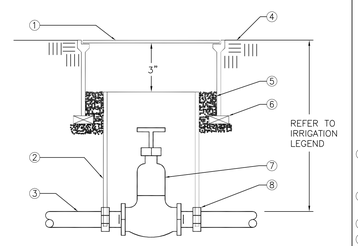

1. ROUND PLASTIC VALVE BOX WITH BOLT DOWN LID. TOP DIMENSION: 10".
2. 8" CLASS 160 OR SCHEDULE 40 PVC PIPE (NOTCH TO FIT OVER MAIN LINE PIPE)
3. PVC MAIN LINE
4. FINISH GRADE
5. PEA GRAVEL
6. BRICK–2 TOTAL
7. GATE VALVE
8. SCHEDULE 40 PVC MALE ADAPTER

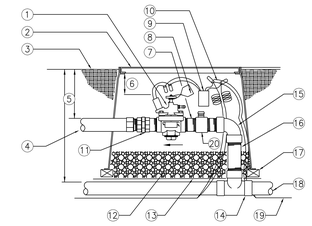

1. REMOTE CONTROL VALVE WITH FLOW CONTROL AND MANUAL BLEED AND PRESSURE REGULATOR
2. ROUND VALVE BOX. ONE VALVE PER BOX– NO EXCEPTIONS.
3. FINISH GRADE
4. PVC LATERAL LINE
5. REFER TO IRRIGATION LEGEND
6. 3" MIN 6" MAX
7. SCHEDULE 80 PVC NIPPLE
8. VALVE I.D. TAG (CONTROLLER AND STATION NUMBER).
9. TUCOR DECODER (RKLD–050)
10. TUCOR TWO WIRE– PROVIDE 3M–DBY SEAL PACKS AT ALL SPLICES AND 24" OF EXCESS WIRE
11. SCHEDULE 80 PVC THREADED UNION
12. PEA GRAVEL– 4" DEEP BELOW VALVE (NO SOIL IN VALVE BOX)
13. STAINLESS STEEL 1" SQUARE WIRE MESH
14. UPC APPROVED SCHEDULE 40 PVC TEE
15. SCHEDULE 80 PVC 90° ELBOW (SXT)
16. SCHEDULE 80 PVC NIPPLE– LENGTH AS REQUIRED.
17. BRICK–1 EACH CORNER
18. PVC MAIN LINE
19. TUCOR TWO WIRE WITHIN 1" CONDUIT.
20. SCHEDULE 80 BALL VALVE

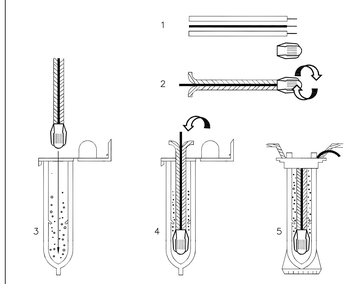

INSTRUCTIONS:
1. STRIP WIRES APPROXIMATELY 1/2" (12.7 MM) TO EXPOSE WIRE.
2. TWIST CONNECTOR AROUND WIRES CLOCKWISE UNTIL HAND TIGHT, DO NOT OVERTIGHTEN.
3. INSERT WIRE ASSEMBLY INTO PLASTIC TUBE UNTIL WIRE CONNECTOR SNAPS PAST LIP IN BOTTOM OF TUBE.
4. PLACE WIRES WHICH EXIT TUBE IN WIRE EXIT HOLES AND CLOSE CAP UNTIL IT SNAPS.
5. INSPECT FINAL SPLICE ASSEMBLY TO BE SECURE AND FINISHED.

1 — 24" x 12" CONTROLLER ASSEMBLY (ICA3)
Scale: NONE
Det: ICA3

2 — REDUCED PRESSURE BACKFLOW ASSEMBLY
SCALE: NONE
DET: RPB–1

3 — BACKFLOW PREVENTER ENCLOSURE
SCALE: NONE
DET: ENC–SMOOTH

4 — 2 1/2" AND SMALLER GATE VALVE
SCALE: NONE
DET: SOVD

5 — REMOTE CONTROL VALVE W/DECODER.
SCALE: NONE
DET: RCV

6 — WEATHERPROOF SPLICE ASSEMBLY
SCALE: NONE
DET: WIRE–SPL

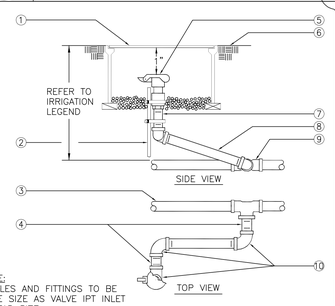

NOTE:
NIPPLES AND FITTINGS TO BE SAME SIZE AS VALVE IPT INLET THREAD SIZE

1. ROUND PLASTIC VALVE BOX WITH BOLT DOWN LID. TOP DIMENSION: 10".
2. 1 1/4" x 1 1/4" x 3/16" ANGLE IRON 30" LONG W/2 STAINLESS STEEL STRAPS (ONE AROUND QCV)
3. PVC MAIN LINE
4. 3" LONG SCHEDULE 80 PVC THREADED NIPPLE
5. QUICK COUPLING VALVE
6. FINISH GRADE
7. SCHEDULE 80 PVC THREADED NIPPLE
8. 10" LONG SHCEDULE 80 PVC THREADED NIPPLE
9. UPC APPROVED SCHEDULE 40 PVC TEE OR ELBOW
10. SCHEDULE 80 PVC THREADED 90° ELL

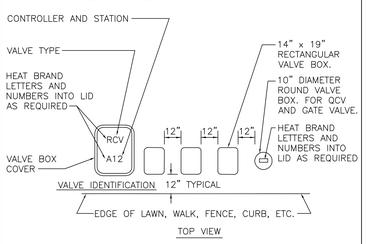

INSTRUCTIONS:
1. CENTER VALVE BOX OVER REMOTE CONTROL VALVE TO FACILITATE SERVICING VALVE.
2. SET BOXES 1" ABOVE FINISH GRADE OR MULCH COVER IN GROUND COVER/SHRUB AREA AND FLUSH WITH FINISH GRADE IN TURF AREA.
3. SET RCV AND VALVE BOX ASSEMBLY IN GROUND COVER/SHRUB AREA WHERE POSSIBLE. INSTALL IN LAWN ONLY IF GROUND COVER DOES NOT EXIST ADJACENT TO LAWN.
4. SET BOXES PARALLEL TO EACH OTHER AND PERPENDICULAR TO EDGE OF LAWN, WALK, FENCE, CURB, ETC.
5. AVOID HEAVILY COMPACTING SOIL AROUND VALVE BOXES TO PREVENT COLLAPSE AND DEFORMATION OF VALVE BOX SIDES.
6. INSTALL EXTENSION BY VALVE BOX MANUFACTURER AS REQUIRED TO COMPLETELY ENCLOSE ASSEMBLY FOR EASY ACCESS.

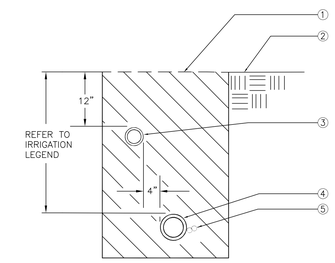

1. CLEAN BACKFILL MATERIAL
2. FINISH GRADE
3. LATERAL LINE
4. MAIN LINE
5. TWO WIRE PATH

NOTE: 1. SET SPRINKLER 1" ABOVE FINISH GRADE AT TIME OF INSTALLATION – LOWER TO FINISH GRADE WHEN TURF IS WELL ESTABLISHED.
2. NIPPLES AND FITTINGS TO BE SAME IPT SIZE AS ROTARY SPRINKLER IPT INLET THREAD SIZE.

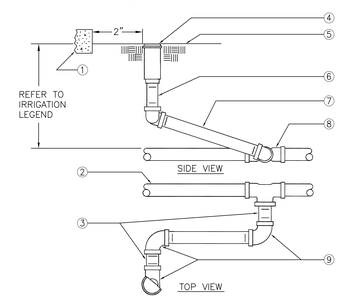

1. WALL, WALK, CURB OR HEADER
2. PVC LATERAL LINE
3. 3" LONG SCHEDULE 80 PVC THREADED NIPPLE
4. POP–UP ROTARY SPRINKLER
5. FINISH GRADE
6. SCHEDULE 80 PVC THREADED NIPPLE (LENGTH AS REQUIRED)
7. 10" LONG SCHEDULE 80 PVC THREADED NIPPLE
8. UPC APPROVED SCHEDULE 40 PVC TEE OR ELBOW
9. SCHEDULE 80 PVC THREADED 90° ELL

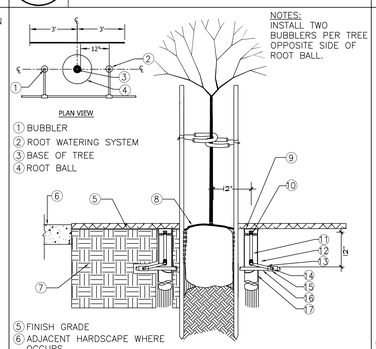

NOTES:
INSTALL TWO BUBBLERS PER TREE OPPOSITE SIDE OF ROOT BALL.

1. BUBBLER
2. ROOT WATERING SYSTEM
3. BASE OF TREE
4. ROOT BALL
5. FINISH GRADE
6. ADJACENT HARDSCAPE WHERE OCCURS
7. BACK FILL MIX
8. ROOT BALL
9. 4–INCH GRATE
10. BUBBLER
11. 10" X 1/2" PVC SCH 80 NIPPLE
12. 1/2–INCH 90–DEGREE ELBOW
13. 12–INCH SWING ASSEMBLY
14. 1/2–INCH MALE NPT INLET
15. PVC SCH 40 TEE OR ELBOW
16. LATERAL PIPE
17. 4–INCH BASKET WEAVE CANISTER 36" LONG FILLED WITH PEA GRAVEL AND WRAPPED IN FILTER FABRIC

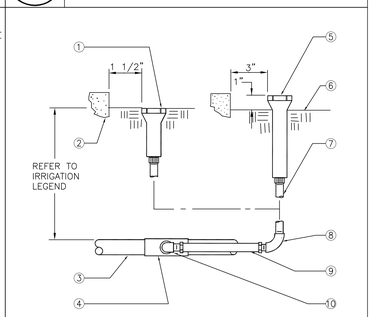

1. POP–UP LAWN SPRAY SPRINKLER
2. WALL, WALK, CURB OR BUILDING
3. PVC LATERAL LINE
4. UPC APPROVED SCHEDULE 40 PVC TEE OR ELBOW
5. POP–UP SHRUB SPRAY SPRINKLER OR BUBBLER
6. FINISH GRADE
7. 1/2" SCHEDULE 80 PVC THREADED NIPPLE (LENGTH AS REQUIRED – TYPICAL)
8. 1/2" SCHEDULE 40 PVC THREADED 90° ELL
9. COBRA CONNECTOR MODEL CC–600 (1/2"X6")
10. 1/2" SCHEDULE 40 PVC STREET ELL

7 — QUICK COUPLING VALVE
SCALE: NONE
DET: QUICK–C2

8 — VALVE BOX INSTALLATION
SCALE: NONE
DET: VALVE–B1

9 — TRENCHING
SCALE: NONE
DET: TRENCH

10 — POP–UP LAWN ROTARY SPRINKLER RISER
SCALE: NONE
DET: LAROTARY

11 — ROOT WATERING SYSTEM AT TREES
SCALE: NONE
DET: RWS

12 — POP–UP SPRAY SPRINKLER RISER
SCALE: NONE
DET: SH/LW–POPSP

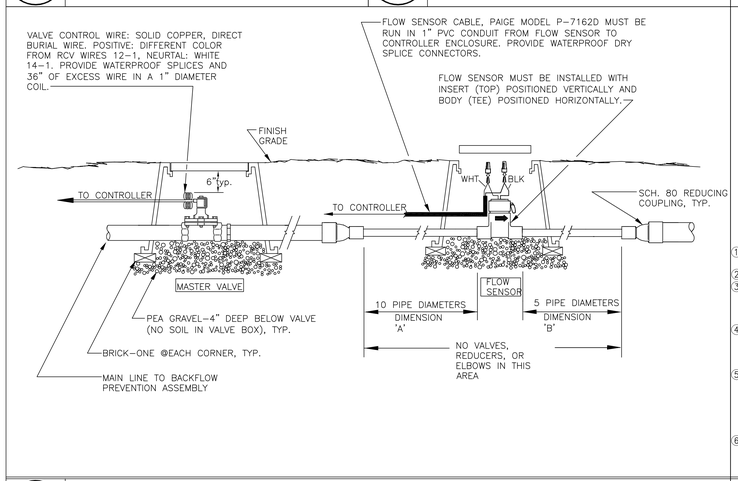

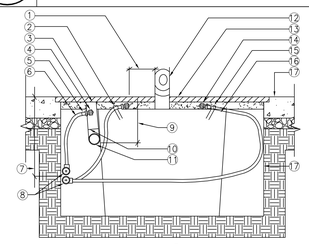

1. LOCATE SURFACE BUBBLER 12" MAXIMUM FROM TREE TRUNK.
2. RAIN BIRD TDS–050 TIE DOWN STAKE.
3. 4" SOLID PVC DRAIN PIPE RISER WITH BLACK N.D.S. DRAIN GRATE FOR ACCESS TO BUBBLER. (2 PER TREE).
4. FLOOD BUBBLER (1.0 GPM)–SEE LEGEND. INSTALL 2 WITHIN 4" SOLID PVC RISER AND ONE ON TOP OF ROOTBALL (PER TREE).
5. 1/2" SCH. 40 MALE ADAPTER– INSERT THREADS INTO HOLE DRILLED INTO SIDE OF 4" SOLID PVC DRAIN PIPE RISER AND INSTALL BUBBLER (DRILL HOLE 6" DOWN FROM DRAIN GRATE).
6. 1/2" IPS EXCALIBUR PVC HOSE OR APPROVED EQUAL. SOLVENT WELD TO FITTINGS WITH #795 IBS CEMENT.
7. 12" MINIMUM COVER OVER LATERAL LINE.
8. PVC LATERAL WITH SCH. 40 TEE OR ELL.
9. 12" MINIMUM DEPTH BELOW FINISH PAVING. REFER TO CIVIL DRAWINGS FOR EXACT DEPTHS.
10. 4" PVC DRAIN LINE TEE.
11. 4" PVC PERFORATED DRAIN LINE WITH FILTER SOCK AMD PERFORATIONS POINTED DOWN. INSTALL PERFECTLY LEVEL–NO SLOPE.
12. TREE TRUNK.
13. TREE GRATE.
14. FLOOD BUBBLER, 2 PER TREE
15. 2" GRAVEL LAYER.
16. ROOT BALL.
17. FINNISH PAVING.
18. EDGE OF TREE TRENCH.

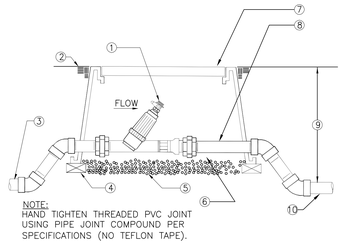

NOTE:
HAND TIGHTEN THREADED PVC JOINT USING PIPE JOINT COMPOUND PER SPECIFICATIONS (NO TEFLON TAPE).

1. WYE CONFIGURATION FILTER WITH 150 MESH STAINLESS STEEL SCREEN AND FLUSH VALVE (ROTATE FILTER PARALLEL TO PEA GRAVEL).
2. FINISH GRADE
3. PVC LATERAL LINE FROM REMOTE CONTROL VALVE
4. BRICK–1 EACH CORNER
5. PEA GRAVEL–4" DEEP (NO SOIL IN VALVE BOX)
6. SCHEDULE 80 PVC MALE UNION–2 TOTAL
7. RECTANGULAR PLASTIC VALVE BOX WITH BOLT DOWN LID. ONE VALVE PER BOX– NO EXCEPTIONS. INSTALL BOX AS SHOWN IN BOX INSTALLATION DETAIL. TOP DIMENSION: 11 3/4" X 17" (12" DEEP)
8. SCHEDULE 80 PVC THREADED NIPPLES– AS REQUIRED
9. LOWER PIPING TO REQUIRED DEPTH USING SCHEDULE 40 PVC 45° ELBOWS. (TYPICAL FOR BOTH SIDES OF UNIT).
10. PVC LATERAL LINE TO DRIP SYSTEM

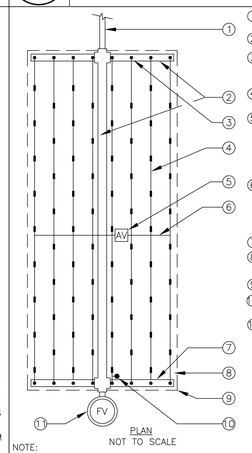

1. PVC LATERAL LINE FROM DRIP ZONE KIT.
2. PVC SUPPLY MANIFOLD.
3. TORO DL2000 MANIFOLD–TO–ELBOW CONNECTION (TYP).
4. TORO DL2000 DRIPLINE LATERAL.
5. TORO DL2000 AIR/VACUUM RELIEF VALVE PLUMBED TO TORO BLUE STRIPE POLY TUBING AT EACH HIGH POINT.
6. AIR/VACUUM RELIEF LATERAL, TORO BLUE STRIPE POLY TUBING CENTERED ON MOUND OR BERM.
7. PVC FLUSH MANIFOLD.
8. PERIMETER LATERALS 2" TO 4" FROM EDGE.
9. AREA PERIMETER.
10. TORO DL2000 OPERATION INDICATOR.
11. TORO DL2000 AUTOMATIC FLUSH VALVE PLUMBED TO FLUSH MANIFOLD AT LOW POINT.

NOTE:
THE TOTAL LENGTH OF ALL INTERCONNECTED DRIP LINE SHALL NOT EXCEED THE MAXIMUM RUN LENGTH.

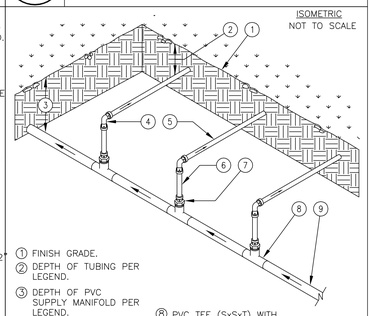

1. FINISH GRADE.
2. DEPTH OF TUBING PER LEGEND.
3. DEPTH OF PVC SUPPLY MANIFOLD PER LEGEND.
4. TORO LOC–EZE TEE (FEE16).
5. TORO DL2000 DRIPLINE LATERAL.
6. TORO BLUE STRIPE POLY TUBING, LENGTH AS NECESSARY.
7. TORO LOC–EZE X 1/2" MTP ADAPTER (FAM16).
8. PVC TEE (SxSxT) WITH 1/2" FPT OUTLET.
9. PVC SUPPLY MANIFOLD FROM DRIP ZONE KIT.

NOTE:
THE TOTAL LENGTH OF ALL INTERCONNECTED DRIP LINE SHALL NOT EXCEED THE MAXIMUM RUN LENGTH.

13 — INSTALLATION DETAIL – MASTER VALVE/FLOW SENSOR
SCALE: NONE
DET: – – – – – – – –

14 — TREE BUBBLERS WITHIN STRUCTURAL SOIL
SCALE: NONE
DET: TREE–SBUB

15 — WYE STRAINER–REGULATOR ASSEMBLY
SCALE: NONE
DET: Wye–Reg

16 — TORO DL 2000 END FEED LAYOUT
SCALE: NONE

17 — TORO DL 2000 END FEED MANIFOLD
SCALE: NONE
DET: 128

Irrigation Consultant:
Russell D. Mitchell Associates, Inc.
2760 Camino Diablo
Walnut Creek, CA 94597
tel 925.939.3985 ♦ fax 925.932.5671
www.rmairrigation.com

Solomon Cordwell Buenz
www.scb.com
Chicago 312.896.1100
San Francisco 415.216.2450
Architecture Planning Interior Design

SWA
2200 Bridgeway
Sausalito
CA 94965
Ph 415.332.5100
Fax 415.332.0719
www.swagroup.com

LICENSED LANDSCAPE ARCHITECT
LICENSE NUMBER 2008
Signature
11.30.2015
Renewal Date
12.17.2013
Date
STATE OF CALIFORNIA

UNIVERSITY OF CALIFORNIA
MERCED
FIRE MARSHAL
Approval of this plan does not authorize or approve any omission or deviation from applicable regulations. Final approval is subject to field inspection One set of approved plans shall be available on the Project site at all times.
Reviewed by:
Date:
UCM Project #: 300290

NO.	DATE	DESCRIPTION	NO.	DATE	DESCRIPTION
2	02.27.2014	ADDENDUM NO. 2			
	12.20.2013	100% CONSTRUCTION DOCUMENTS			
	10.21.2013	90% CONSTRUCTION DOCUMENTS			
	07.26.2013	50% CONSTRUCTION DOCUMENTS			
	04.15.2013	100% DESIGN DEVELOPMENT			
	01.28.2013	100% SCHEMATIC DESIGN			

CLASSROOM AND ACADEMIC OFFICE BUILDING
UCMERCED

IRRIGATION DETAILS

Scale: AS NOTED
Drawn By: ZRD
Project Number: SCBS203
Sheet Number: L2.02

© 2012 Solomon Cordwell Buenz

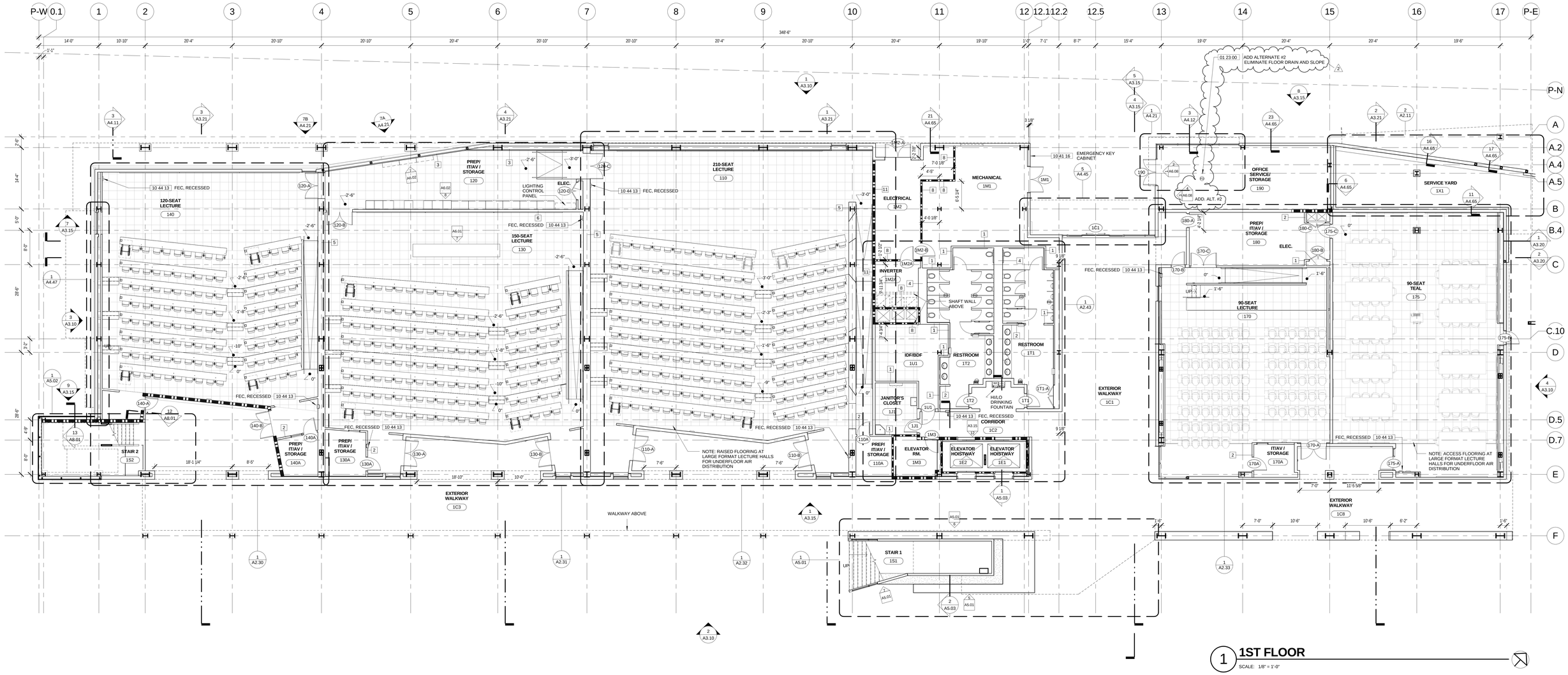

1 1ST FLOOR

SCALE: 1/8" = 1'-0"

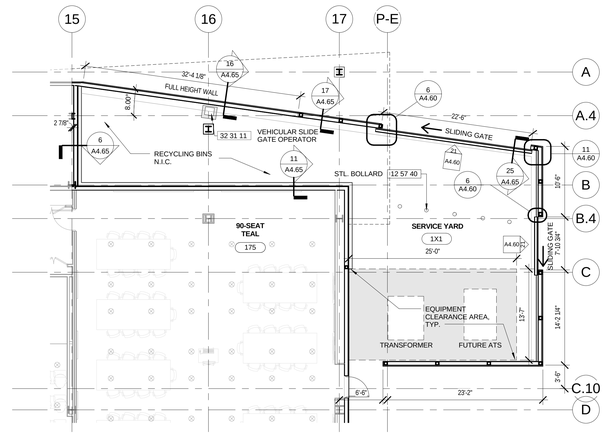

2 SERVICE YARD

SCALE: 1/8" = 1'-0"

NOTE: REFER TO SPECIFICATION SECTION 01 43 39 MOCK-UPS FOR ADDITIONAL MOCK-UP REQUIREMENTS

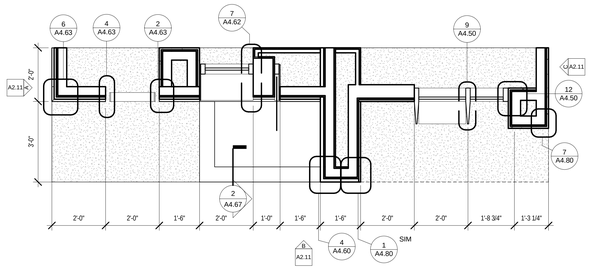

3 MOCK-UP PLAN

SCALE: 1/2" = 1'-0"

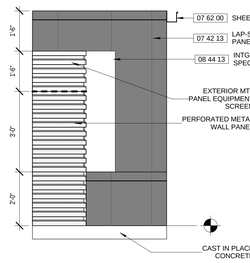

A LEFT SIDE

SCALE: 1/2" = 1'-0"

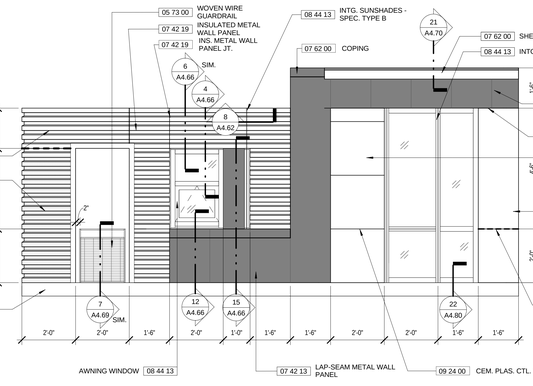

B FRONT

SCALE: 1/2" = 1'-0"

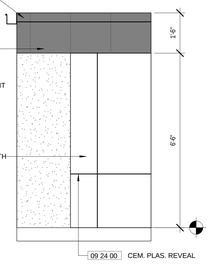

C RIGHT SIDE

SCALE: 1/2" = 1'-0"

Solomon Cordwell Buenz
www.scb.com

Chicago 312.896.1100
San Francisco 415.216.2450

Architecture Planning Interior Design

GENERAL NOTES:

1. ALL STAIRS ARE TO COMPLY WITH 2010 CALIFORNIA BUILDING CODE STANDARDS FOR ACCESSIBILITY AND EGRESS REQUIREMENTS. REFER TO SHEETS A0.30 THROUGH A0.35 FOR CODE ANALYSIS, INCLUDING EXIT AND STAIR WIDTH REQUIREMENTS.
2. REFER TO SHEET A0.10 FOR SYMBOL, LEGEND, ABBREVIATIONS, AND TYPICAL MOUNTING HEIGHTS. WALL-MOUNTED HANDRAILS SHALL BE INSTALLED WITH BACKING AS REQUIRED BY THE BACKING PLATE REQUIREMENTS.
3. REFER TO SHEET A8.01 FOR PARTITION TYPES AND SHEET A08.10 FOR DOOR SCHEDULE INFORMATION, INCLUDING DOOR WIDTHS AND FIRE RATED ASSEMBLIES.
4. REFER TO STRUCTURAL DRAWINGS FOR DESIGN OF GUARDRAIL ATTACHMENT TO THE BUILDING STRUCTURE. WOVEN WIRE MESH INFILL PANELS ARE PER THE ARCHITECTURAL DRAWINGS.
5. REFER TO LANDSCAPE DRAWINGS FOR SITE RELATED DETAILS

UNIVERSITY OF CALIFORNIA
MERCED
PRELIMINARY
Approval of this plan does not authorize or approve any omission or deviation from applicable regulations. Final approval is subject to field inspection One set of approved plans shall be available on the Project site at all times.
Reviewed by: _____
Date: _____
UCM Project #: 900290

NO.	DATE	DESCRIPTION	NO.	DATE	DESCRIPTION
2	02.27.2014	ADDENDUM NO. 2			
	12.20.2013	100% CONSTRUCTION DOCUMENTS			
	10.21.2013	90% CONSTRUCTION DOCUMENTS			
	07.26.2013	50% CONSTRUCTION DOCUMENTS			
	04.15.2013	100% DESIGN DEVELOPMENT			
	01.28.2013	100% SCHEMATIC DESIGN			

CLASSROOM AND ACADEMIC OFFICE BUILDING

UCMERCED

© 2012 Solomon Cordwell Buenz

LICENSED ARCHITECT 06-30-2015 STATE OF CALIFORNIA

FIRST FLOOR PLAN

Scale: As indicated

Drawn By: JY

Project Number: 2012040

Sheet Number: **A2.11**

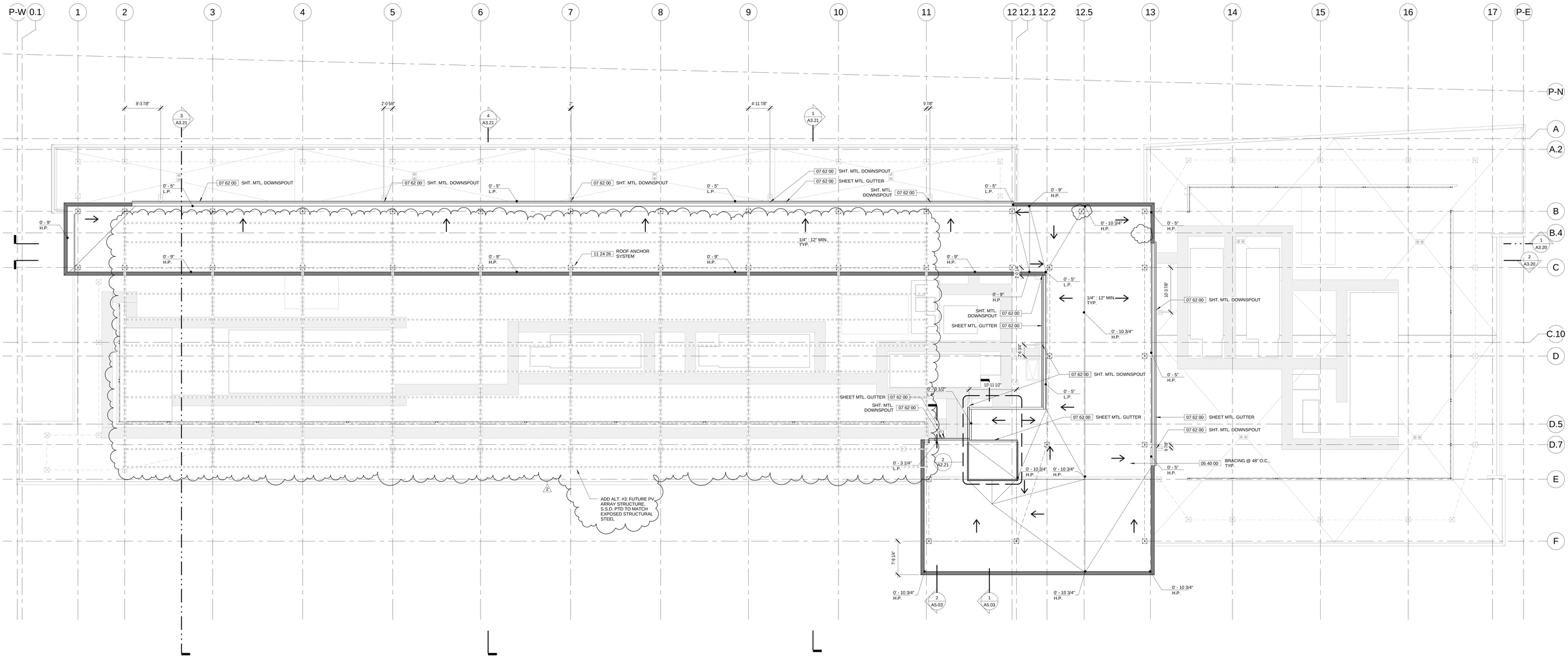

1 LANTERN ROOF

SCALE: 1/8" = 1'-0"

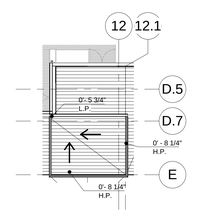

2 ELEVATOR ROOF

SCALE: 1/8" = 1'-0"

Solomon Cordwell Buenz
www.scb.com

Chicago 312.896.1100
San Francisco 415.216.2450

Architecture Planning Interior Design

GENERAL NOTES:

1. ALL STAIRS ARE TO COMPLY WITH 2010 CALIFORNIA BUILDING CODE STANDARDS FOR ACCESSIBILITY AND EGRESS REQUIREMENTS. REFER TO SHEETS A0.30 THROUGH A0.35 FOR CODE ANALYSIS, INCLUDING EXIT AND STAIR WIDTH REQUIREMENTS.
2. REFER TO SHEET A0.10 FOR SYMBOL LEGEND, ABBREVIATIONS, AND TYPICAL MOUNTING HEIGHTS. WALL-MOUNTED HANDRAILS SHALL BE INSTALLED WITH BACKING AS REQUIRED BY THE BACKING PLATE REQUIREMENTS.
3. REFER TO SHEET A8.01 FOR PARTITION TYPES AND SHEET A08.10 FOR DOOR SCHEDULE INFORMATION, INCLUDING DOOR WIDTHS AND FIRE RATED ASSEMBLIES.
4. REFER TO STRUCTURAL DRAWINGS FOR DESIGN OF GUARDRAIL ATTACHMENT TO THE BUILDING STRUCTURE. WOVEN WIRE MESH INFILL PANELS ARE PER THE ARCHITECTURAL DRAWINGS.
5. REFER TO LANDSCAPE DRAWINGS FOR SITE RELATED DETAILS

UNIVERSITY OF CALIFORNIA
MERCED
FIRE MARSHAL
Approval of this plan does not authorize or approve any omission or deviation from applicable regulations. Final approval is subject to field inspection One set of approved plans shall be available on the Project site at all times.
Reviewed by: _____
Date: _____
UCM Project #: 906290

NO.	DATE	DESCRIPTION	NO.	DATE	DESCRIPTION
2.	02.27.2014	ADDENDUM NO. 2			
	12.20.2013	100% CONSTRUCTION DOCUMENTS			
	10.21.2013	90% CONSTRUCTION DOCUMENTS			
	07.26.2013	50% CONSTRUCTION DOCUMENTS			
	04.15.2013	100% DESIGN DEVELOPMENT			
	01.28.2013	100% SCHEMATIC DESIGN			

CLASSROOM AND ACADEMIC OFFICE BUILDING

UCMERCED

© 2012 Solomon Cordwell Buenz

LICENSED ARCHITECT
06-06-2005
STATE OF CALIFORNIA

LANTERN PLAN

Scale: 1/8" = 1'-0"
Drawn By: OG
Project Number: 2012040

Sheet Number: A2.21

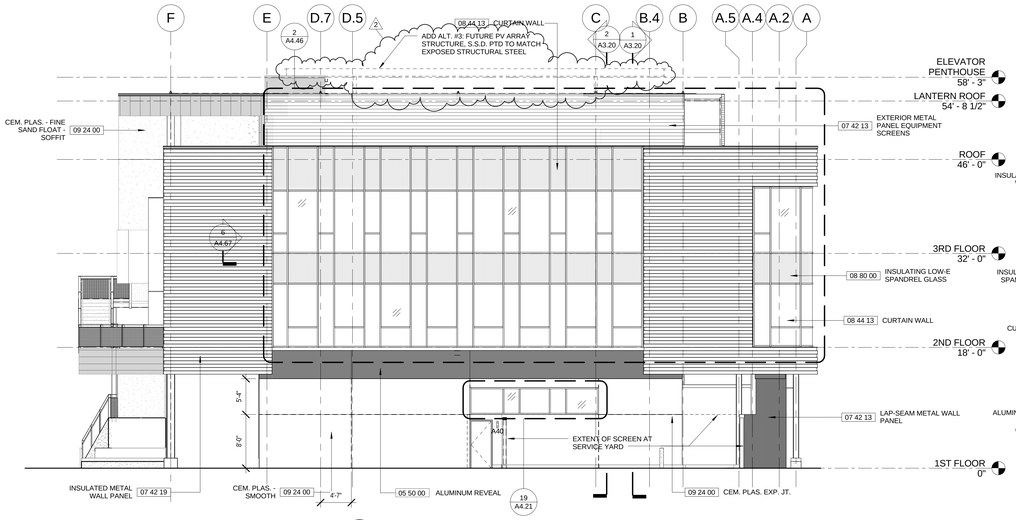

4 EAST BUILDING ELEVATION

SCALE: 1/8" = 1'-0"

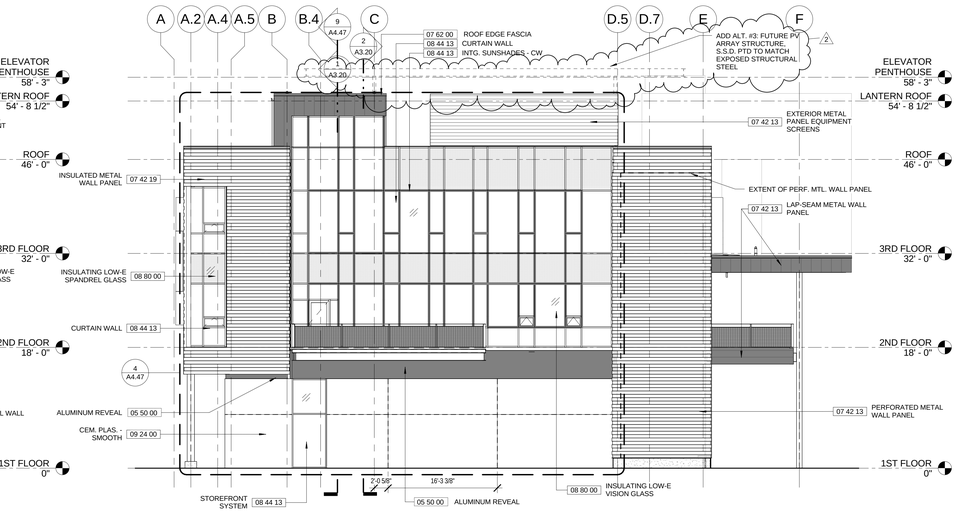

3 WEST BUILDING ELEVATION

SCALE: 1/8" = 1'-0"

MATERIAL LEGEND

LEGEND KEY:

MATERIAL (SPEC SECTION)
ASSEMBLY (EXTERIOR TO WALL CORE)**:

INSULATED METAL WALL PANEL (07 42 19)
1. KINGSPAN DESIGNWALL 2000R, 2" (R-7), KYNAR FINISH
2. VAPOR PERMEABLE WRB
3. 5/8" GYP. BD. SHEATHING
4. 4" ENGINEERED STUD PARTITION WITH MINERAL WOOL INSULATION, 4" THICK (R-16)

EXTERIOR METAL PANEL EQUIPMENT SCREENS (07 42 13)
1. MORIN "INTEGRITY SERIES" X-12/X16 CORRUGATED METAL PANEL (PROFILE TO MATCH INSUL. MET. WALL PANEL)
2. ENGINEERED SUPPORT FRAMING PER STRUCTURAL DRAWINGS.

PERFORATED METAL WALL PANEL (07 42 13)
1. MORIN PERFORATED CORRUGATED METAL WALL PANEL, 3/8" HOLE, 9/16" SPACING, 40% OPEN AREA (PROFILE TO MATCH INSUL. MET. WALL PANEL)
2. ENGINEERED SUPPORT FRAMING PER STRUCTURAL DRAWINGS.

CEMENT PLASTER, FINE SAND FLOAT (09 24 00)
1. 7/8" THREE-COAT PORTLAND CEM. PLAS. SYSTEM WITH PTD. FINISH
2. VAPOR PERMEABLE WRB
3. 5/8" GYP. BD. SHEATHING
4. 6" ENGINEERED STUD PARTITION, STUDS @ 16" O.C. MAX. WITH MINERAL WOOL INSULATION, 6" THICK (R-24)
CEM. PLAS. EXP. JT.
CEM. PLAS. CTL. JT., TYP.

CEMENT PLASTER, SMOOTH (09 24 00)
1. 7/8" THREE-COAT PORTLAND CEM. PLAS. SYSTEM WITH PTD FINISH
2. VAPOR PERMEABLE WRB
3. 5/8" GYP. BD. SHEATHING
4. 6" ENGINEERED STUD PARTITION, STUDS @ 16" O.C. MAX. WITH THERMAFIBER VERSABOARD 35, 6" THICK (R-24)
CEM. PLAS. EXP. JT.

GLAZED CERAMIC TILE, TYPES 1 & 2 MIX (09 30 00)
1. THINSET CERAMIC WALL TILE, 6" X 12"
2. CEMENT PLASTER BROWN COAT
3. VAPOR PERMEABLE WRB
4. 5/8" GYPSUM SHEATHING
5. 6" ENGINEERED STUD PARTITION, STUDS @ 16" O.C. MAX. WITH MINERAL WOOL INSULATION, 6" THICK (R-24)

LAP-SEAM METAL WALL PANEL (07 42 13)
1. AEP SPAN "PRESTIGE" SERIES, 12" METAL PANEL WITH NO REVEAL
2. VAPOR PERMEABLE WRB
3. 5/8" GYPSUM SHEATHING
4. 6" ENGINEERED STUD PARTITION WITH MINERAL WOOL INSULATION, 6" THICK (R-24)

CAST-IN-PLACE CONCRETE (03 30 10)
1. CAST-IN-PLACE CONCRETE, LIGHT SANDBLAST FINISH

****NOTE: MANUFACTURERS AND MODEL NUMBERS LISTED IN THIS MATERIAL LEGEND FORM THE BASIS OF DESIGN IN ACCORDANCE WITH SECTION 01 25 00.**

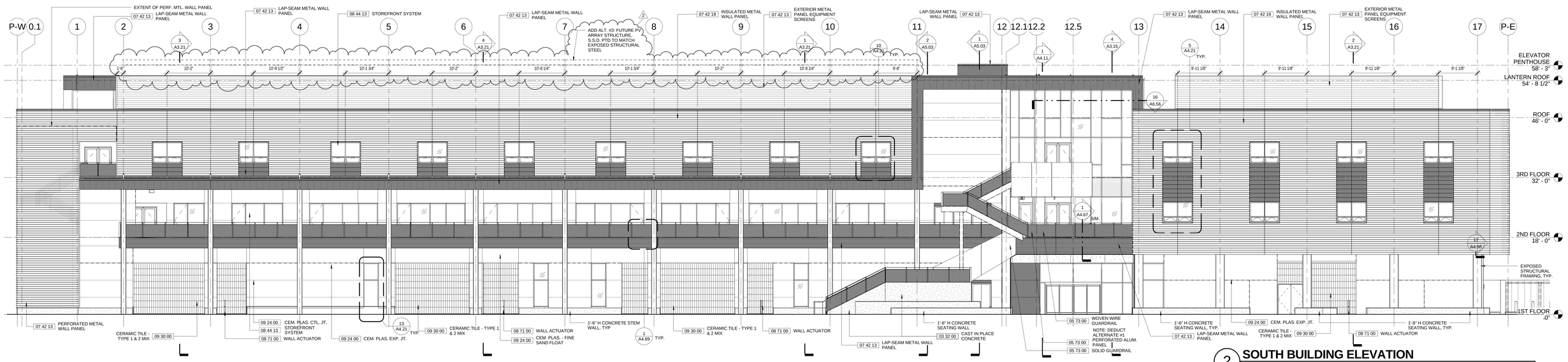

2 SOUTH BUILDING ELEVATION

SCALE: 1/8" = 1'-0"

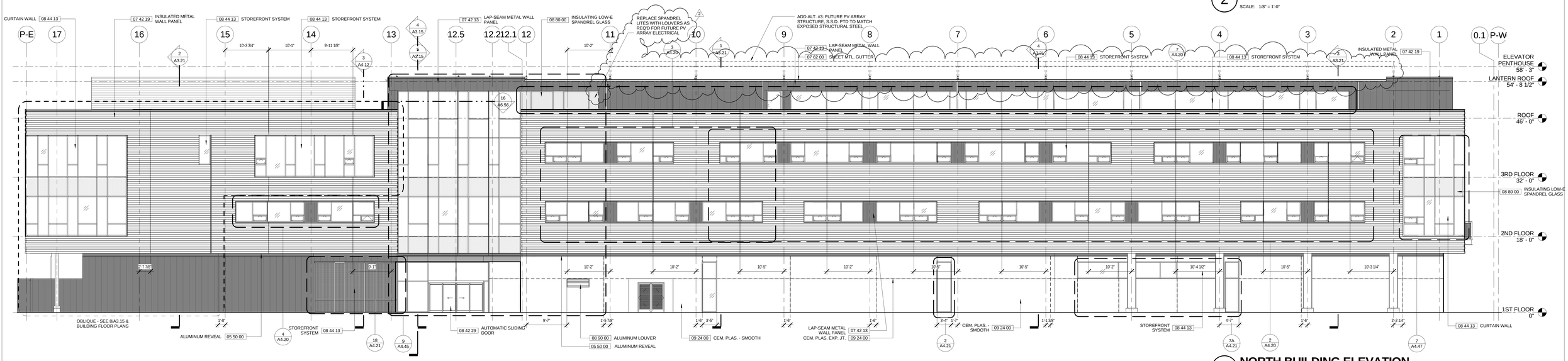

1 NORTH BUILDING ELEVATION

SCALE: 1/8" = 1'-0"

SCB Solomon Cordwell Buenz
www.scb.com
Chicago 312.896.1100
San Francisco 415.216.2450
Architecture Planning Interior Design

UNIVERSITY OF CALIFORNIA
MERCED
FIRE MARSHAL
Approval of this plan does not authorize or approve any omission or deviation from applicable regulations. Final approval is subject to field inspection. Copies of approved plans shall be available on the Project site at all times.
Reviewed by: _____
Date: _____
UCM Project #: 300290

NO.	DATE	DESCRIPTION	NO.	DATE	DESCRIPTION
2	02.27.2014	ADDENDUM NO. 2			
	12.20.2013	100% CONSTRUCTION DOCUMENTS			
	10.21.2013	90% CONSTRUCTION DOCUMENTS			
	07.26.2013	50% CONSTRUCTION DOCUMENTS			
	04.15.2013	100% DESIGN DEVELOPMENT			
	01.28.2013	100% SCHEMATIC DESIGN			

CLASSROOM AND ACADEMIC OFFICE BUILDING

UCMERCED

© 2012 Solomon Cordwell Buenz

LICENSED ARCHITECT
Jeffrey Yovers
05-30-2015
STATE OF CALIFORNIA

OVERALL BUILDING ELEVATIONS

Scale: 1/8" = 1'-0"
Drawn By: JY
Project Number: 2012040

Sheet Number: A3.10

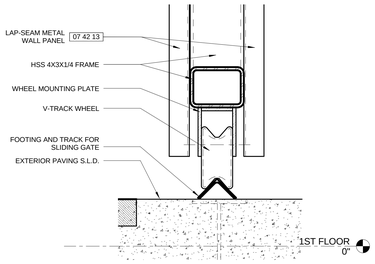

25 BASE @ SERVICE YARD GATE, TYP.
SCALE: 3" = 1'-0"

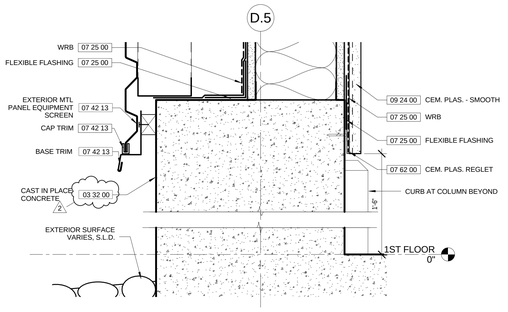

20 STAIR 2 - DOUBLE WALL
SCALE: 3" = 1'-0"

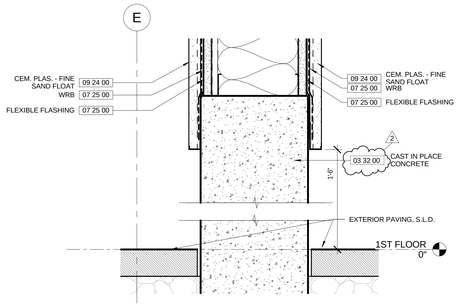

15 STAIR 2 - STEM WALL
SCALE: 3" = 1'-0"

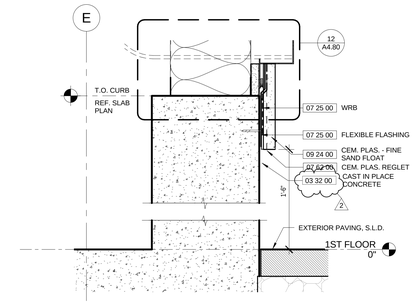

10 TYP. STEM WALL AT PLASTER
SCALE: 3" = 1'-0"

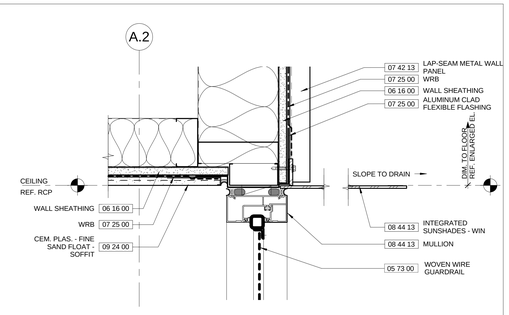

5 HEAD AT STORAGE ROOM
SCALE: 3" = 1'-0"

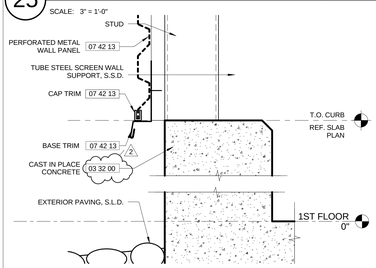

24 STEM WALL AT PERFORATED MTL.
SCALE: 3" = 1'-0"

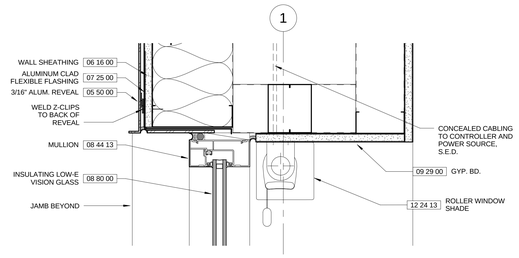

19 HEAD AT METAL REVEAL
SCALE: 3" = 1'-0"

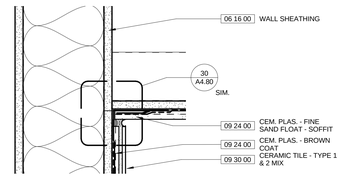

14 SOFFIT AT TILE WALL
SCALE: 3" = 1'-0"

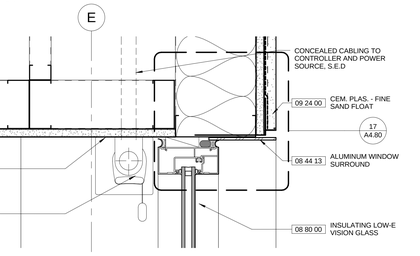

9 CONCRETE COLUMN BASE, TYP.
SCALE: 3" = 1'-0"

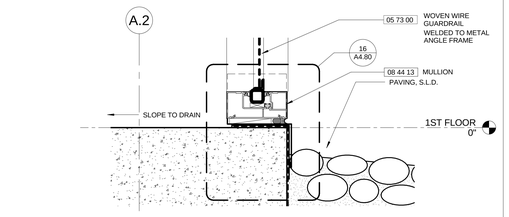

4 HORIZONTAL AT STORAGE ROOM
SCALE: 3" = 1'-0"

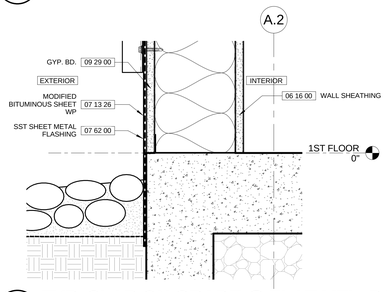

23 TYP. SLAB ON GRADE @ FLAT MTL. PANEL
SCALE: 3" = 1'-0"

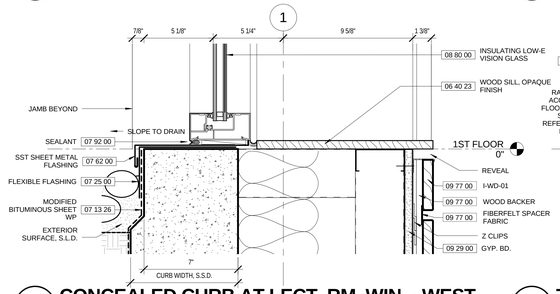

18 CONCEALED CURB AT LECT. RM. WIN. - WEST
SCALE: 3" = 1'-0"

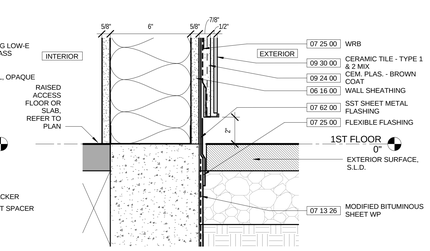

13 TYP. SLAB ON GRADE AT TILE WALL
SCALE: 3" = 1'-0"

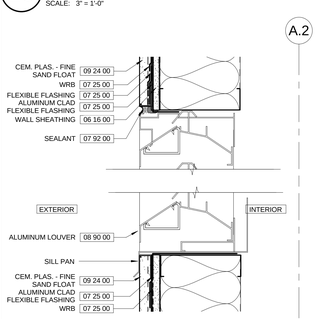

22 JAMB AND HEAD AT LOUVER
SCALE: 3" = 1'-0"

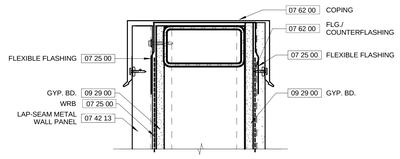

17 SECTION AT TOP OF SERVICE YARD WALL
SCALE: 3" = 1'-0"

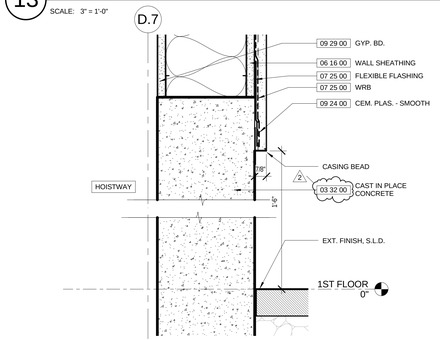

12 ELEVATOR WALL - FIRST FLOOR
SCALE: 3" = 1'-0"

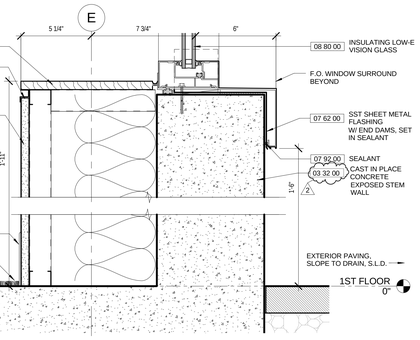

7 TYP. STEM WALL AT LECTURE HALL SOUTH WINDOW
SCALE: 3" = 1'-0"

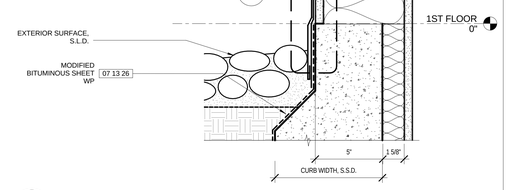

2 TYPICAL CURB AT STUCCO WALL
SCALE: 3" = 1'-0"

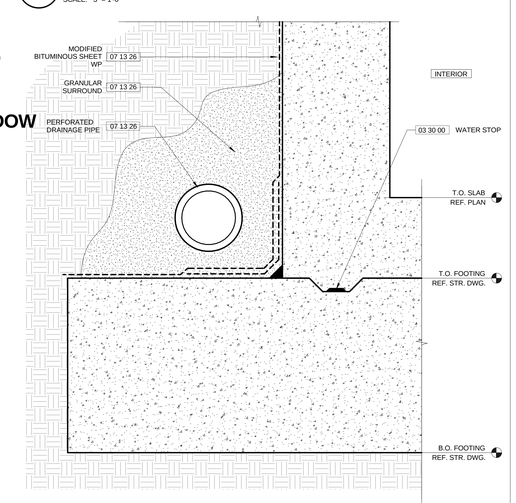

1 TYPICAL FOUNDATION DETAIL
SCALE: 3" = 1'-0"

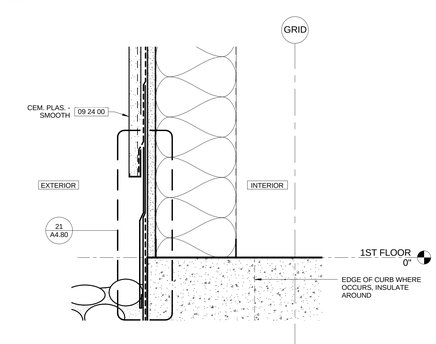

21 TYP. CURB OR SLAB ON GRADE AT PLASTER
SCALE: 3" = 1'-0"

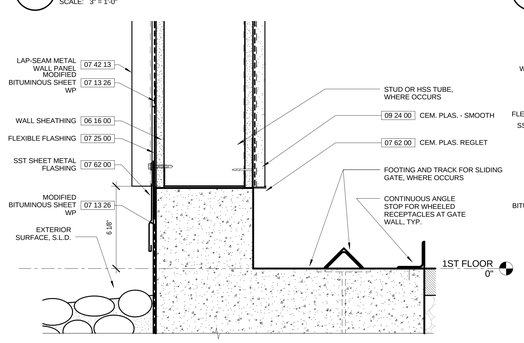

16 BASE AT SERVICE YARD SCREEN WALL, TYP.
SCALE: 3" = 1'-0"

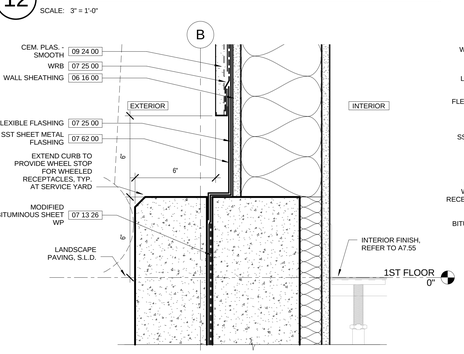

11 CURB @ SERVICE YARD - STUCCO
SCALE: 3" = 1'-0"

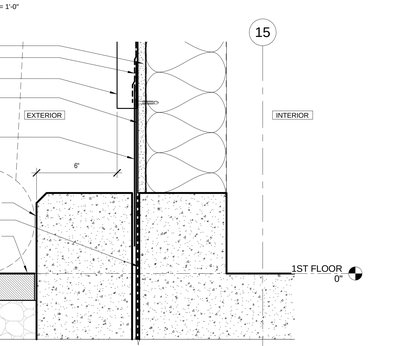

6 CURB @ SERVICE YARD - FLAT MTL. PANEL
SCALE: 3" = 1'-0"

SCB Solomon Cordwell Buenz
www.scb.com
Chicago 312.896.1100
San Francisco 415.216.2450
Architecture Planning Interior Design

GENERAL NOTES:
1. ALL EXPOSED CAST IN PLACE CONCRETE REFER TO 03 32 00 U.O.N. 2

UNIVERSITY OF CALIFORNIA MERCED
FIRE MARSHAL
Approval of this plan does not constitute or approve any omission or deviation from applicable regulations. Final approval is subject to field inspection Over-set of approved plans shall be available on the Project site at all times.
Reviewed by: _____
Date: _____
UCM Project #: 980290

NO.	DATE	DESCRIPTION	NO.	DATE	DESCRIPTION
2.	02.27.2014	ADDENDUM NO. 2			
	12.20.2013	100% CONSTRUCTION DOCUMENTS			
	10.21.2013	90% CONSTRUCTION DOCUMENTS			
	07.26.2013	50% CONSTRUCTION DOCUMENTS			
	04.15.2013	100% DESIGN DEVELOPMENT			
	01.28.2013	100% SCHEMATIC DESIGN			

CLASSROOM AND ACADEMIC OFFICE BUILDING
UCMERCED

© 2012 Solomon Cordwell Buenz

LICENSED ARCHITECT Mark Cavagnero 06-30-2015 STATE OF CALIFORNIA

EXTERIOR SECTION DETAILS

Scale: As indicated
Drawn By: JY
Project Number: 2012040
Sheet Number: A4.65

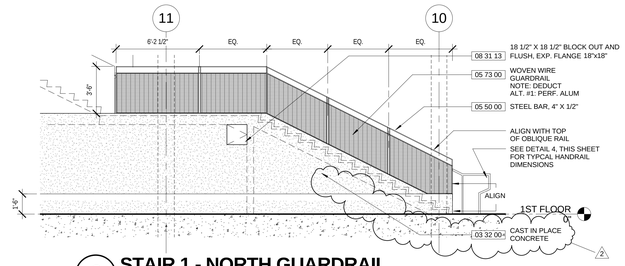

6 STAIR 1 - NORTH GUARDRAIL

SCALE: 1/4" = 1'-0"

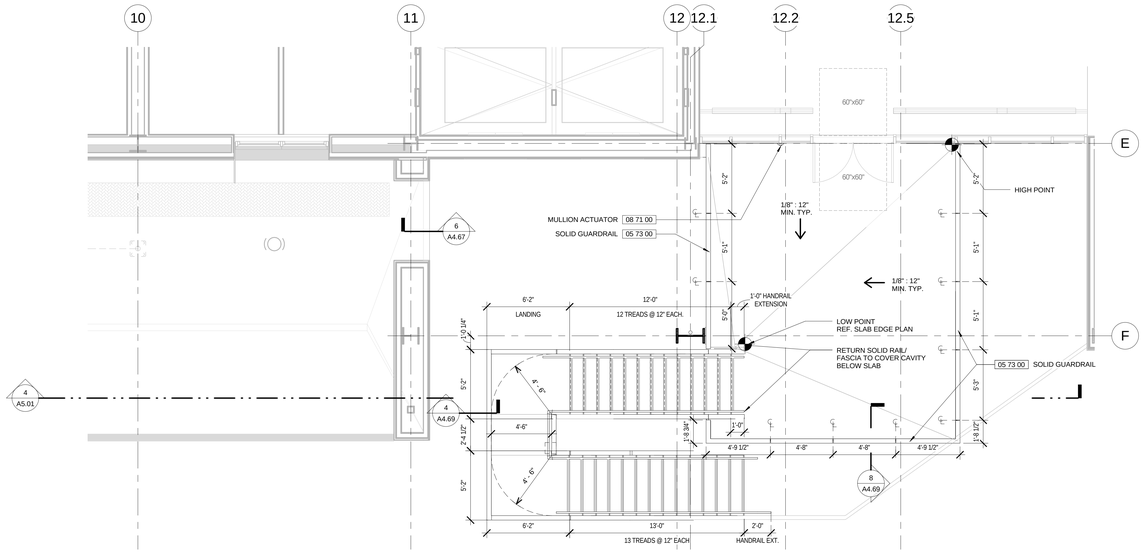

3 STAIR 1 - THIRD FLOOR ENLARGED PLAN

SCALE: 1/4" = 1'-0"

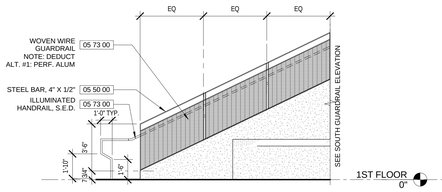

7 STAIR 1 - SOUTH GUARDRAIL (OBLIQUE)

SCALE: 1/4" = 1'-0"

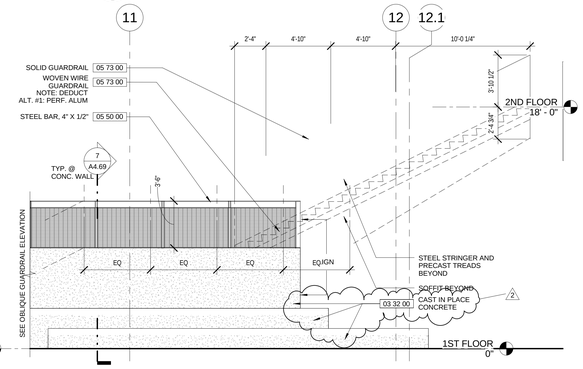

5 STAIR 1 - SOUTH GUARDRAIL

SCALE: 1/4" = 1'-0"

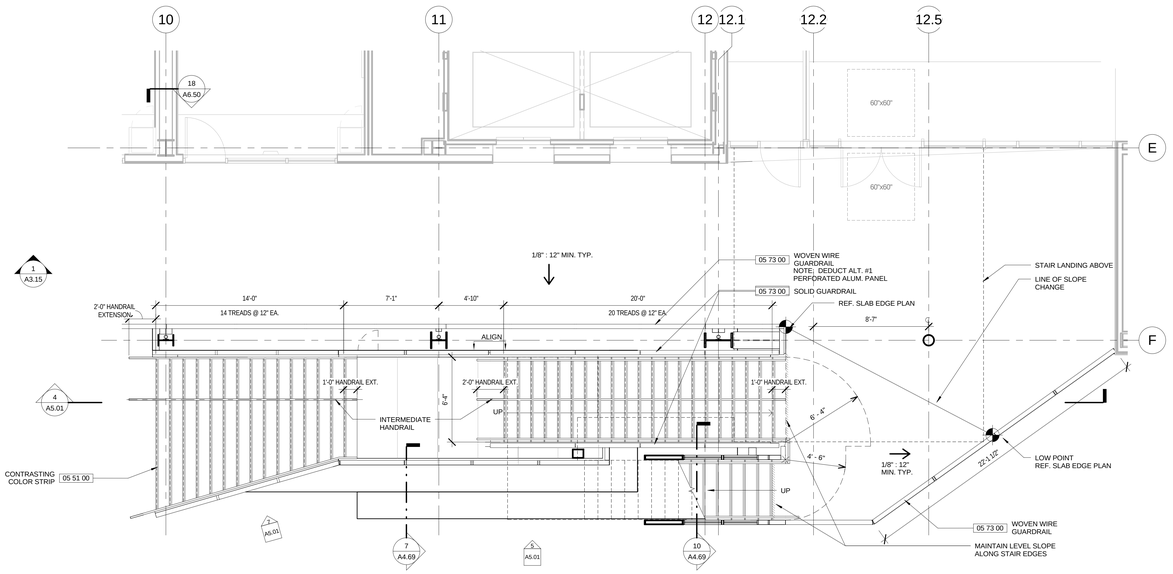

2 STAIR 1 - SECOND FLOOR ENLARGED PLAN

SCALE: 1/4" = 1'-0"

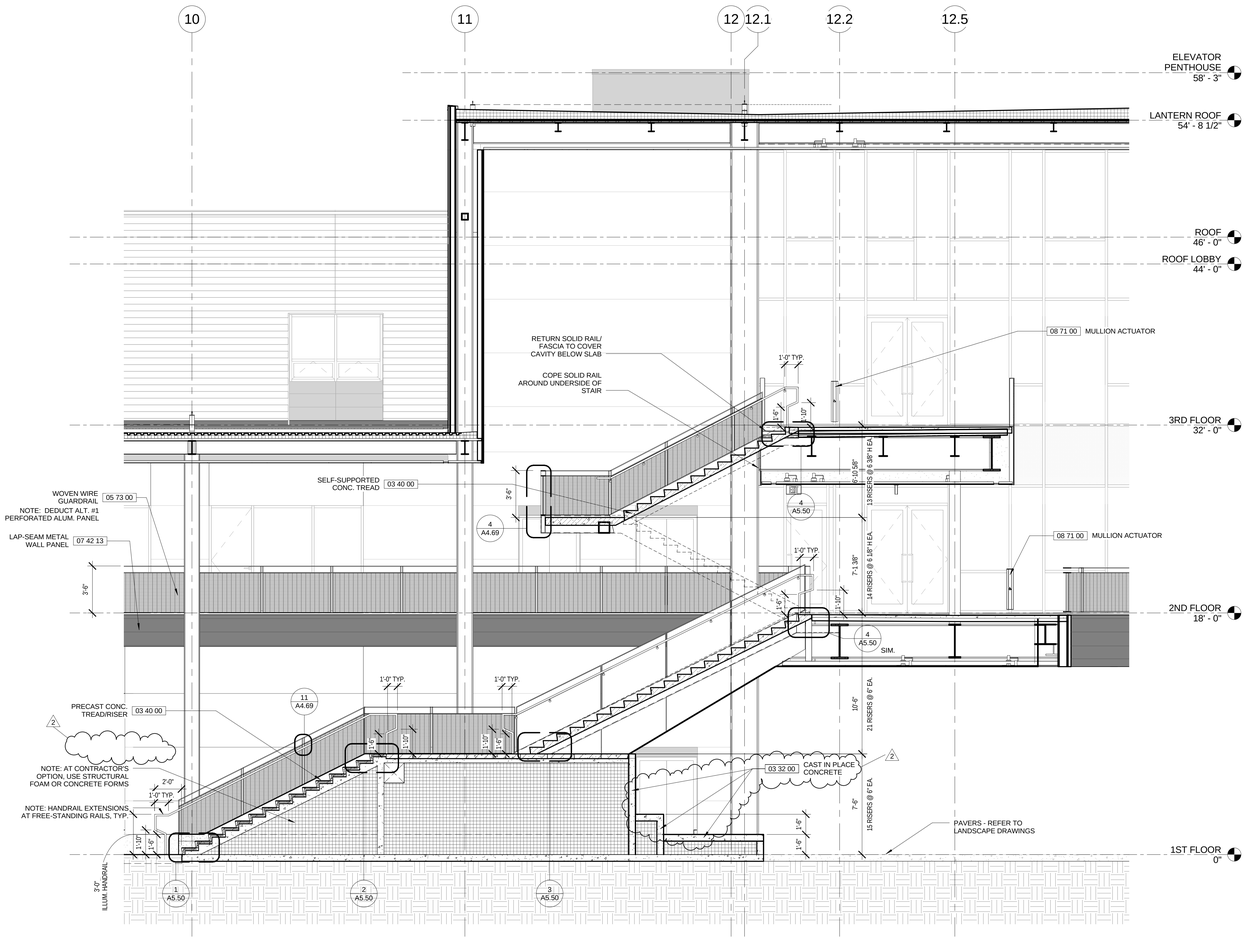

4 STAIR 1 SECTION

SCALE: 1/4" = 1'-0"

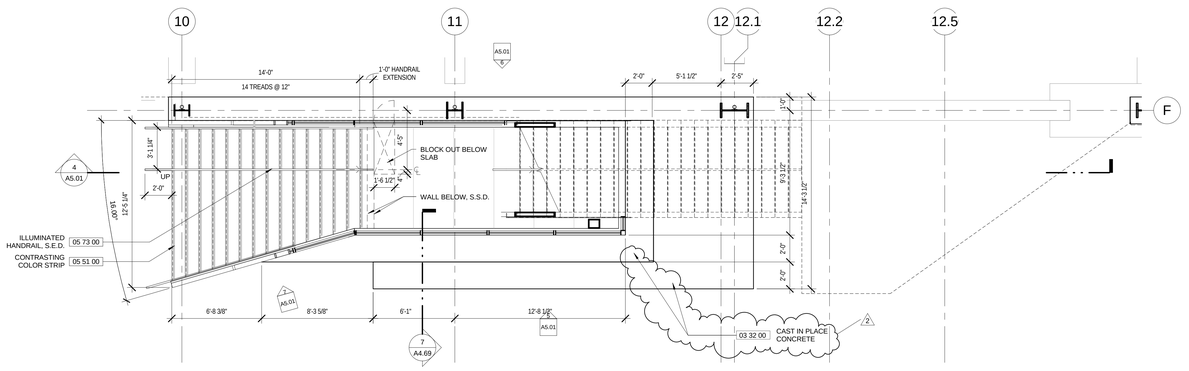

1 STAIR 1 - FIRST FLOOR ENLARGED PLAN

SCALE: 1/4" = 1'-0"

Solomon Cordwell Buenz
www.scb.com

Chicago 312.896.1100
San Francisco 415.216.2450

Architecture Planning Interior Design

GENERAL NOTES:

1. ALL STAIRS ARE TO COMPLY WITH 2010 CALIFORNIA BUILDING CODE STANDARDS FOR ACCESSIBILITY AND EGRESS REQUIREMENTS. REFER TO SHEETS A0.30 THROUGH A0.35 FOR CODE ANALYSIS, INCLUDING EXIT AND STAIR WIDTH REQUIREMENTS.
2. REFER TO SHEET A0.10 FOR SYMBOL LEGEND, ABBREVIATIONS, AND TYPICAL MOUNTING HEIGHTS. WALL-MOUNTED HANDRAILS SHALL BE INSTALLED WITH BACKING AS REQUIRED BY THE BACKING PLATE REQUIREMENTS.
3. REFER TO SHEET A8.01 FOR PARTITION TYPES AND SHEET A08.10 FOR DOOR SCHEDULE INFORMATION, INCLUDING DOOR WIDTHS AND FIRE RATED ASSEMBLIES.
4. REFER TO STRUCTURAL DRAWINGS FOR DESIGN OF GUARDRAIL ATTACHMENT TO THE BUILDING STRUCTURE. WOVEN WIRE MESH INFILL PANELS ARE PER THE ARCHITECTURAL DRAWINGS.
5. REFER TO LANDSCAPE DRAWINGS FOR SITE RELATED DETAILS

UNIVERSITY OF CALIFORNIA
MERCED
FOR REVIEW ONLY
Approval of this plan does not authorize or approve any omission or deviation from applicable regulations. Final approval is subject to field inspection One set of approved plans shall be available on the Project site at all times.
Reviewed by: _____
Date: _____
UCM Project #: _900290

NO.	DATE	DESCRIPTION	NO.	DATE	DESCRIPTION
2.	02.27.2014	ADDENDUM NO. 2			
	12.20.2013	100% CONSTRUCTION DOCUMENTS			
	10.21.2013	90% CONSTRUCTION DOCUMENTS			
	07.26.2013	50% CONSTRUCTION DOCUMENTS			
	04.15.2013	100% DESIGN DEVELOPMENT			
	01.28.2013	100% SCHEMATIC DESIGN			

CLASSROOM AND ACADEMIC OFFICE BUILDING

UCMERCED

© 2012 Solomon Cordwell Buenz

LICENSED ARCHITECT
06-30-2015
STATE OF CALIFORNIA

ENLARGED STAIR PLANS AND SECTIONS

Scale: As indicated
Drawn By: JY
Project Number: 2012040
Sheet Number: A5.01

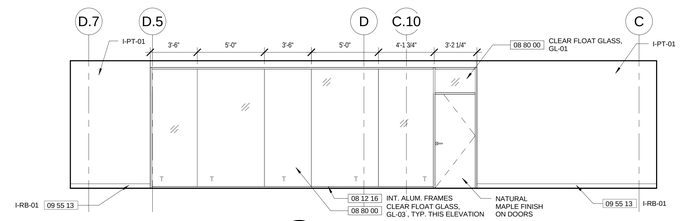

10 HALLWAY 2C7 - W. ELEVATION

SCALE: 1/4" = 1'-0"

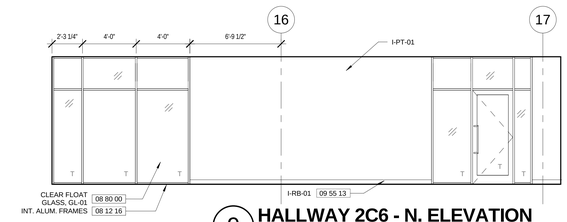

9 HALLWAY 2C6 - N. ELEVATION

SCALE: 1/4" = 1'-0"

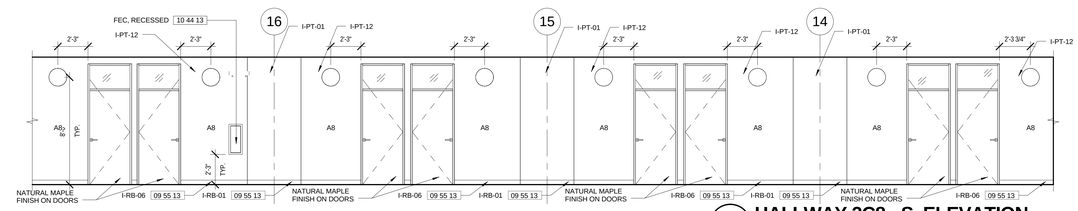

8 HALLWAY 2C8 - S. ELEVATION

SCALE: 1/4" = 1'-0"

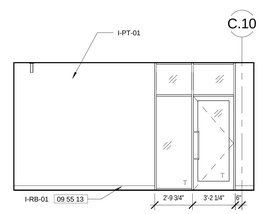

7 HALLWAY 2C4 - W. ELEVATION

SCALE: 1/4" = 1'-0"

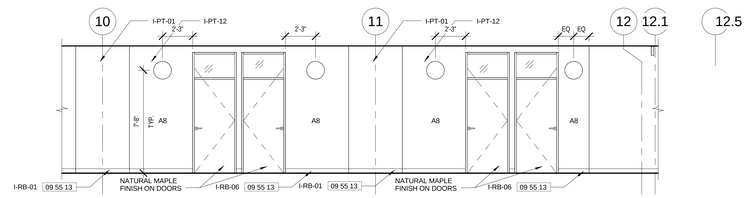

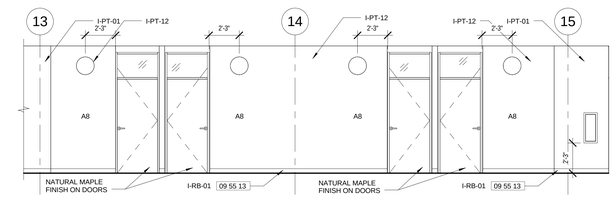

6 HALLWAY 2C5 - N. ELEVATION (CONTINUED)

SCALE: 1/4" = 1'-0"

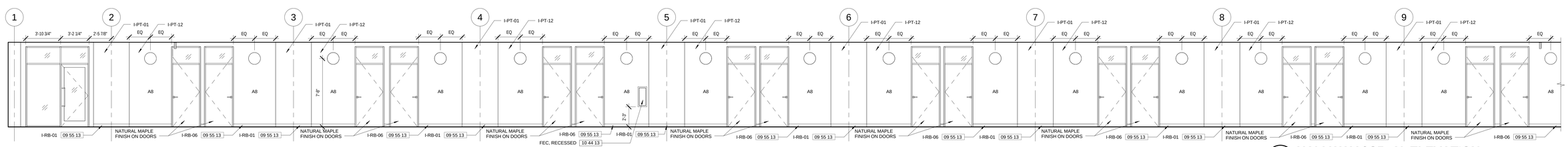

5 HALLWAY 2C5 - N. ELEVATION

SCALE: 1/4" = 1'-0"

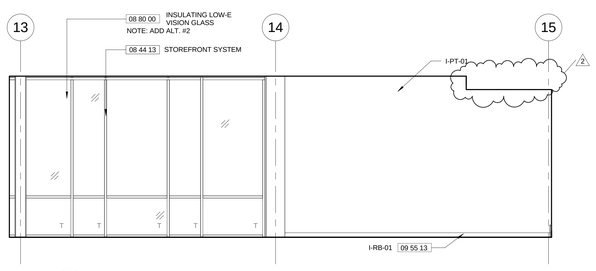

4 OFFICE SERVICE/STORAGE RM. 190 ALT. N. ELEVATION

SCALE: 1/4" = 1'-0"

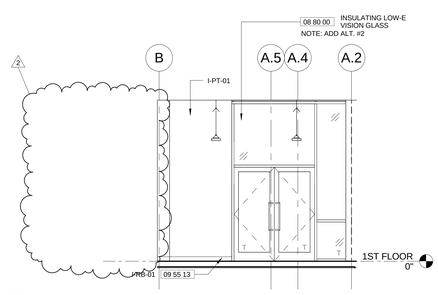

3 OFFICE SERVICE/STORAGE RM. 190 ALT. - W. EL

SCALE: 1/4" = 1'-0"

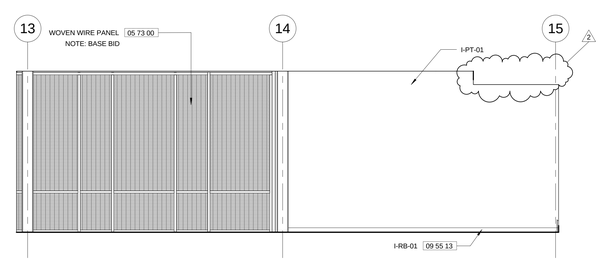

2 OFFICE SERVICE/STORAGE RM. 190 N. ELEVATION

SCALE: 1/4" = 1'-0"

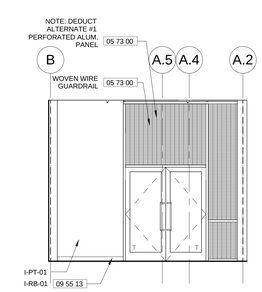

1 OFFICE SERVICE/STOR. RM. 190 - W. ELEV.

SCALE: 1/4" = 1'-0"

Solomon Cordwell Buenz
www.scb.com

Chicago 312.896.1100
San Francisco 415.216.2450

Architecture Planning Interior Design

GENERAL SHEET NOTES:

1. REFER TO SHEET A0.10 FOR TYPICAL MOUNTING HEIGHTS NOT SHOWN ON THESE DRAWINGS, INCLUDING CODE-REQUIRED ACCESSIBILITY MOUNTING REQUIREMENTS & MIN. CLEARANCES.
2. REFER TO FLOOR PLANS (A2 SERIES), DOOR AND PARITION SCHEDULES (A8 SERIES) FOR WALL AND DOOR LOCATIONS, MATERIAL DESIGNATIONS, AND DIMENSIONS. DIMENSIONS, INCLUDING LENGTH, WIDTH, HEIGHT AND THICKNESS, WHERE SHOWN ON THESE ELEVATIONS, ARE PROVIDED FOR CONVENIENCE ONLY. IN THE EVENT ON DISCREPANCIES, THE DIMENSIONS ON PLANS AND SCEHEDULES SHALL GOVERN.
3. REFER TO RCP'S (A7 SERIES) FOR CEILING MATERIALS AND HEIGHTS NOT SHOWN ON THESE DRAWINGS.
4. REFER TO FINISH DRAWINGS, SHEETS A8.30 THROUGH A8.32 FOR INTERIOR MATERIAL SCHEDULES AND SPECIFICATON SECTION REFERENCES.
5. GWB PARTITIONS TO RECEIVE PAINT FINISH I-PT-01 U.N.O.
6. CASEWORK, MILLWORK, RUNNING TRIM, TOILET ACCESSORIES, HANDRAILS AND OTHER ACCESSORIES ARE TO BE SECURED TO STUDS OR BACKING SHEET METALPLATES, TYP. REFER TO BACKING PLATE CRITERIA ON SHEET A0.10.

UNIVERSITY OF CALIFORNIA
MERCED
FIRE MARSHAL
Approval of this plan does not authorize or approve any omission or deviation from applicable regulations. Final approval is subject to field inspection One set of approved plans shall be available on the Project site at all times.
Reviewed by: _____
Date: _____
UCM Project #: 906280

NO.	DATE	DESCRIPTION	NO.	DATE	DESCRIPTION
2	02.27.2014	ADDENDUM NO. 2			
	12.20.2013	100% CONSTRUCTION DOCUMENTS			
	10.21.2013	90% CONSTRUCTION DOCUMENTS			
	07.26.2013	50% CONSTRUCTION DOCUMENTS			
	04.15.2013	100% DESIGN DEVELOPMENT			
	01.28.2013	100% SCHEMATIC DESIGN			

CLASSROOM AND ACADEMIC OFFICE BUILDING

UCMERCED

© 2012 Solomon Cordwell Buenz

LICENSED ARCHITECT
06-06-2015
STATE OF CALIFORNIA

INTERIOR ELEVATIONS

Scale: As indicated
Drawn By: RW
Project Number: 2012040

Sheet Number: **A6.08**

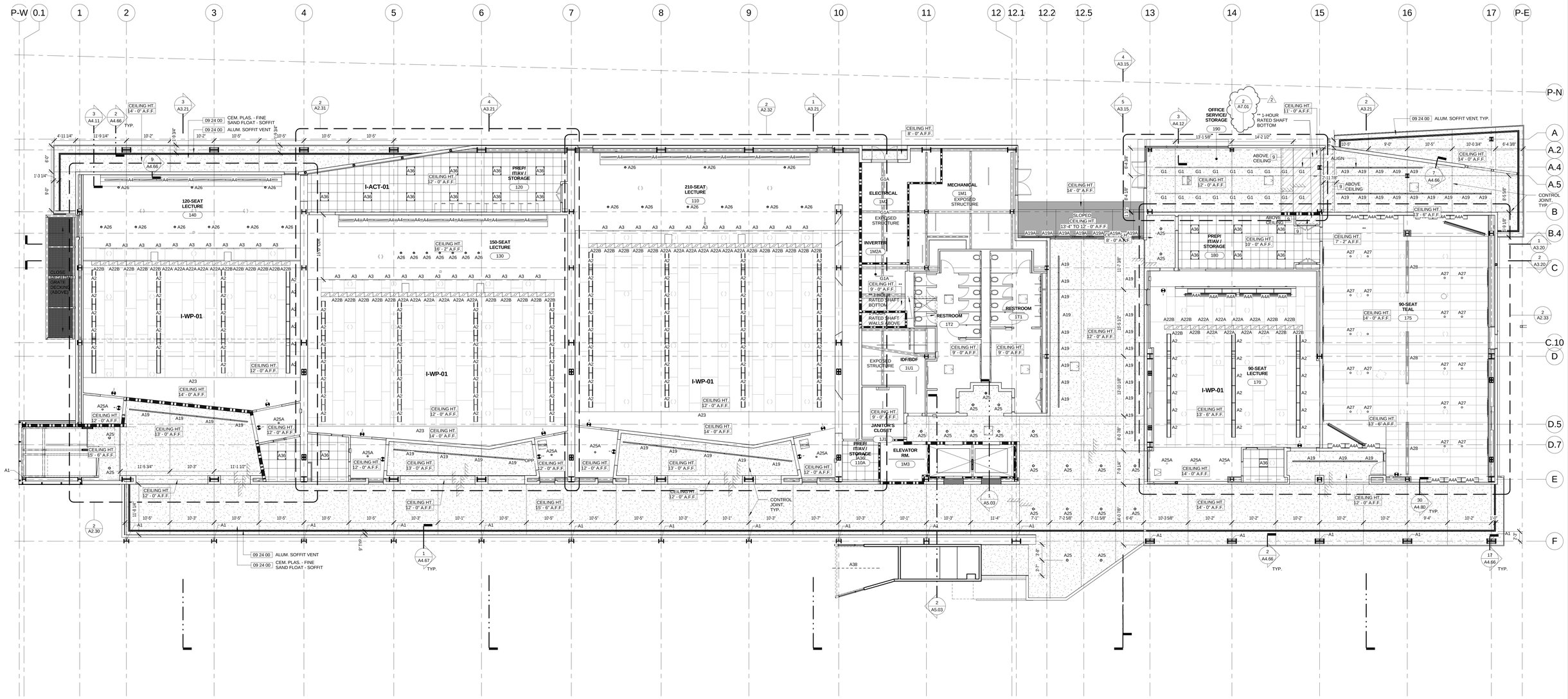

1 FIRST FLOOR REFLECTED CEILING PLAN

SCALE: 1/8" = 1'-0"

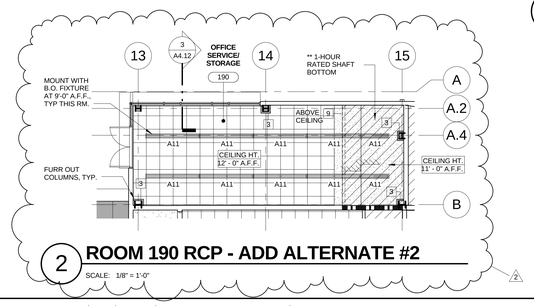

2 ROOM 190 RCP - ADD ALTERNATE #2

SCALE: 1/8" = 1'-0"

SHEET NOTES:

1. ALL OFFICES HAVE CEILING AT 9'-6" A.F.F. U.N.O. WHERE ACOUSTICAL CEILING PANELS MEET GYPSUM WALLBOARD PARTITIONS, OR CEILINGS CHANGE IN ELEVATION, PROVIDE A GYPSUM WALLBOARD BULKHEAD PER DETAIL 1/A7.56.
2. REFER TO SHEET LEGEND FOR CEILING TYPES DESIGNATIONS. REFER TO FINISH PLANS, SHEETS A8.30 TO A8.32 FOR FINISH DESCRIPTIONS.
3. REFER TO ENLARGED PLANS AND RCPS AS CALLED OUT ON THESE SHEETS FOR ADDITIONAL NOTES, DIMENSIONS, AND SPECIFICATION REFERENCES.
4. ALL LIGHTING FIXTURES ARE DIMENSIONED TO CENTERLINE OF FIXTURE, TYP. U.N.O.
5. LIGHT FIXTURE TYPE A37 IS MOUNTED TO TOP OF STRUCTURAL BEAMS, TYP. ROUTE CONDUIT ALONG TOP OF BEAM TO THE NEAREST PARTITION. CONDUIT IS TO REMAIN CONCEALED TO VIEW FROM BELOW, TYP.
6. LIGHT FIXTURE TYPE A1 TO BE CENTERED IN THE COLUMN WEB. THE TOP OF FIXTURE IS TO BE 1'-0" BELOW BOTTOM OF SOFFIT. CONDUIT TO RUN FROM THE SOFFIT AND ALONG THE CENTER OF THE WEB OF THE COLUMN. HOLD CONDUIT TIGHT TO COLUMN; 90 DEGREE TURNS TO OCCUR IN THE SOFFIT SPACE, CONCEALED TO VIEW FROM BELOW.
7. MEP, TECHNOLOGY AND A/V EQUIPMENT IS SHOWN ON ARCHITECTURAL DRAWINGS FOR LOCATION ONLY. REFER TO MEP, TECHNOLOGY AND A/V DRAWINGS AND SPECIFICATIONS FOR ADDITIONAL REQUIREMENTS AND SPECIFIC MOUNTING DETAILS.

Solomon Cordwell Buenz
www.scb.com
Chicago 312.896.1100
San Francisco 415.216.2450
Architecture Planning Interior Design

CEILING MATERIAL LEGEND:

- CEMENT PLASTER SOFFIT
- 5/8" GWB ON MTL. STUD
- METAL PANEL SOFFIT
- 2' X 2' ACT TILE
- 2' X 6' ACT TILE
- WOOD FIBER SOUND ABSORBING UNIT CEILING
- METAL SCREEN
- CEILING ACCESS PANEL

CEILING HT. 10' - 0" A.F.F. : CEILING HEIGHT TAG

A11 : LIGHT FIXTURE PER SCHEDULE

: EXIT SIGN

UNIVERSITY OF CALIFORNIA
MERCED
FIRE MARSHAL
Approval of this plan does not authorize or approve any omission or deviation from applicable regulations. Final approval is subject to field inspection One set of approved plans shall be available on the Project site at all times.
Reviewed By: _____
Date: _____
UCM Project #: 550290

NO.	DATE	DESCRIPTION
2.	02.27.2014	ADDENDUM NO.2
	12.20.2013	100% CONSTRUCTION DOCUMENTS
	10.21.2013	90% CONSTRUCTION DOCUMENTS
	07.26.2013	50% CONSTRUCTION DOCUMENTS
	04.15.2013	100% DESIGN DEVELOPMENT
	01.28.2013	100% SCHEMATIC DESIGN

NO.	DATE	DESCRIPTION

CLASSROOM AND ACADEMIC OFFICE BUILDING

UCMERCED

© 2012 Solomon Cordwell Buenz

LICENSED ARCHITECT
09-30-2015
STATE OF CALIFORNIA

FIRST FLOOR REFLECTED CEILING PLAN

Scale: 1/8" = 1'-0"

Drawn By: RW

Project Number: 2012040

Sheet Number: A7.01

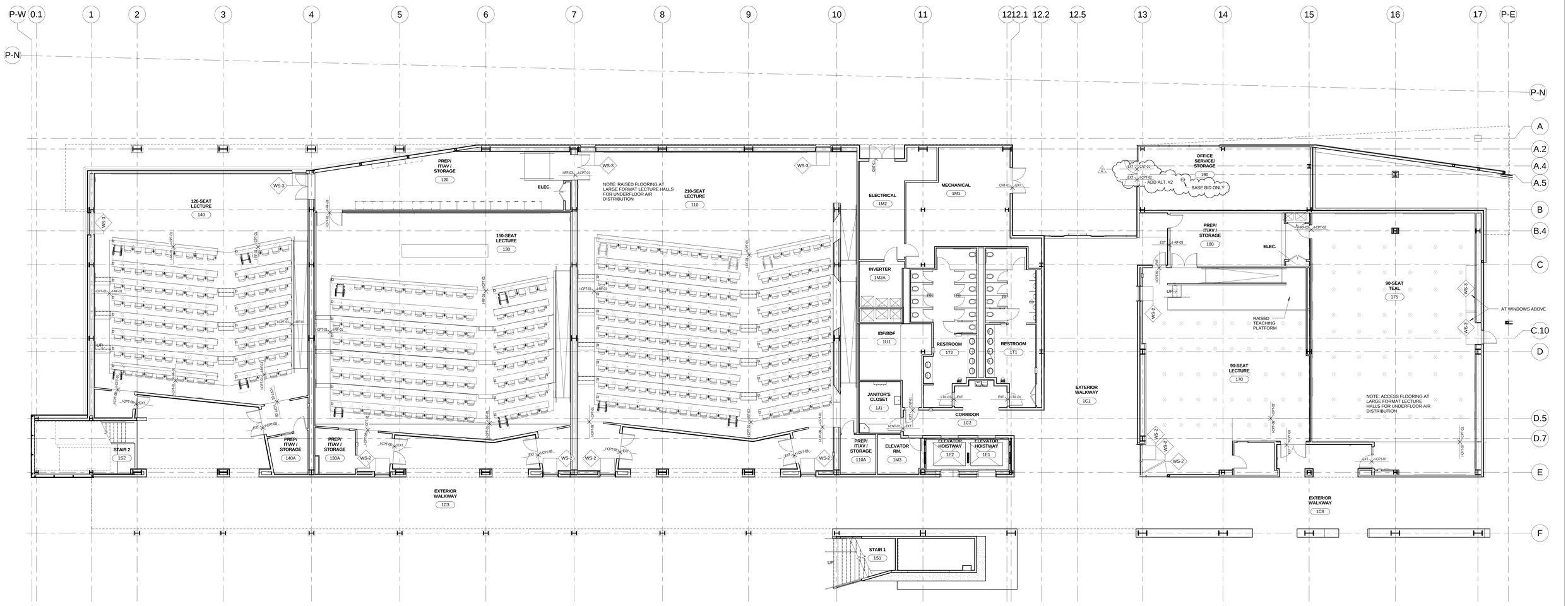

FINISH LEGEND

Abbreviations

ACT	Acoustical Ceiling Tile	GL	Glass	PLAS	Plaster	SLR	Sealer	VB	Vinyl Base	WP	Wall Film
CB	Carpet Base	GRN	Granite	PT	Paint	SS	Solid Surface	VCT	Vinyl Composite Tile		
CT	Ceramic Tile	LAM	Laminate	RB	Rubber Base	TB	Tile Base	WC	Water Closet		
CPT	Carpet	LMS	Limestone	RF	Resilient Flooring	TER	Terrazzo	WD	Wood Covering		
EXT	Exterior	LQ	Lacquer	RT	Rubber Tile	TF	Tile	WV	Wood Veneer		
FAB	Fabric	MT	Metal Ceiling Tile	SF	Stone Floor	TS	Textured Paint	WP	Wall Panel		
FGL	Fiberglass Wall Panels	PL	Plastic Laminate	SDT	Static Dissipative Tile	TR	Transition Strip	WT	Window		

CODE	MANUFACTURER/DISTRIBUTOR	MODEL NO./STYLE/PATTERN	COLOR NAME / NUMBER	DESCRIPTION	NOTES	CONTACT	SPEC SECTION
2 CNT-01	N/A	N/A	N/A	Cast In Place Concrete Slab	Exposed		03 15 00
I-ACT-01	Armstrong	Ultima					09 51 13
I-FB-01	Knoll Textiles	Akita	Bake	Wrapped Panel	Applied on WP-02		09 84 33
I-FB-02	Maharam	Milestone	Embrace	Wrapped Panel	Applied on WP-02		09 84 33
I-FB-03	Not Used	Not Used	Not Used	Not Used	Not Used		09 84 33
I-FB-04	Maharam	Milestone	Basil	Wrapped Panel	Applied on WP-02		09 84 33
I-FB-05	Maharam	Milestone	Tiger Lily	Wrapped Panel	Applied on WP-02		09 84 33
I-FB-06	Maharam	Messenger	Oyster	Wrapped Panel	Applied on WP-02		09 84 33
I-FB-07	Maharam	Milestone	Daffodil	Wrapped Panel	Applied on WP-02		
I-CPT-01	Interface	CAOB_CT 1	Contour	Brick Installation	Lecture Hall	Paul.Colando@interface.com	09 68 16
I-CPT-02	Interface	CAOB_CT 2	Puri/Accent	Brick Installation	Lecture Rm 170, Lecture Rm 175, Offices, Corridors, Conference Rooms, Open Office, Digital Humanities	Paul.Colando@interface.com	09 68 16
I-CPT-03	Interface	CAOB_CT 3	Garbanzo	Brick Installation	Tutorial Classrooms, Seminar Rooms, Labs	Paul.Colando@interface.com	09 68 16
I-CPT-04	Interface	CAOB_CT 4	Granite	Field Tile	Scholarly Activity	Paul.Colando@interface.com	09 68 16
I-CPT-05	Interface	CAOB_CT 5	Gold	Accent Tile	Scholarly Activity	Paul.Colando@interface.com	09 68 16
I-CPT-06	Interface	CAOB_CT 6	Grass	Accent Tile	Scholarly Activity	Paul.Colando@interface.com	09 68 16
I-CPT-07	Interface	CAOB_CT 7	Navy	Accent Tile	Scholarly Activity	Paul.Colando@interface.com	09 68 16
I-CPT-08	Interface	CAOB_CT 8	Grey	Accent Tile	Walk Off Areas	Paul.Colando@interface.com	09 68 16
I-PL-01	Arpa	Aluminum Steel	Satin Finish		Lecture Room 140		06 40 23
I-PL-02	Wilsonart	Fashion Grey D381	Matte Finish	Fixed Table Tops	Lecture Rooms		06 40 23
I-PL-03	Formica	Natural Ribbon Wood	Matte Finish	8840-58	Copy/Pantry Rooms, BOH Areas		06 40 23
I-PL-04	Wilsonart	Designer White	D354	Casework Interiors, Casework Shelf			06 40 23

FINISH LEGEND

Abbreviations

ACT	Acoustical Ceiling Tile	GL	Glass	PLAS	Plaster	SLR	Sealer	VB	Vinyl Base	WP	Wall Film
CB	Carpet Base	GRN	Granite	PT	Paint	SS	Solid Surface	VCT	Vinyl Composite Tile		
CT	Ceramic Tile	LAM	Laminate	RB	Rubber Base	TB	Tile Base	WC	Water Closet		
CPT	Carpet	LMS	Limestone	RF	Resilient Flooring	TER	Terrazzo	WD	Wood Covering		
EXT	Exterior	LQ	Lacquer	RT	Rubber Tile	TF	Tile	WV	Wood Veneer		
FAB	Fabric	MT	Metal Ceiling Tile	SF	Stone Floor	TS	Textured Paint	WP	Wall Panel		
FGL	Fiberglass Wall Panels	PL	Plastic Laminate	SDT	Static Dissipative Tile	TR	Transition Strip	WT	Window		

CODE	MANUFACTURER/DISTRIBUTOR	MODEL NO./STYLE/PATTERN	COLOR NAME / NUMBER	DESCRIPTION	NOTES	CONTACT	SPEC SECTION
I-PT-01	Sherwin Williams	SW7647	Crushed Ice		General Paint		09 91 23
I-PT-02	Sherwin Williams	SW6248	Reynard		Lecture Halls: Exposed Structural Metal Steel		09 91 23
I-PT-03	Sherwin Williams	SW7616	Breezy		TEAL , Open Office		09 91 23
~~I-PT-04~~	Not Used	Not Used	Not Used		Not Used		09 91 23
~~I-PT-05~~	Not Used	Not Used	Not Used		Not Used		09 91 23
~~I-PT-06~~	Not Used	Not Used	Not Used		Not Used		09 91 23
I-PT-07	Not Used	Not Used	Not Used		Not Used		09 91 23
I-PT-08	Sherwin Williams	SW6228	Refuge		Office Accent Paint		09 91 23
I-PT-09	Not Used	Not Used	Not Used	Not Used	Not Used		09 91 23
I-PT-10	Sherwin Williams	SW7069	Iron Ore		Lobby Accent		09 91 23
I-PT-11	Benjamin Moore	161	Pan for Gold		Elevator/Lobby		09 91 23
I-PT-12	Sherwin Williams	SW7649	Silvergate		Corridor Accent		09 91 23
E-PT-01	Benjamin Moore	HC - 167	Amherst Gray		Exterior Exposed Structural Steel		09 91 13
I-RF-01	Johnsonite	Metallurgy Hammered Tile	Silver Slate	HRTS-CGM	Lecture Halls		09 65 19
I-RF-02	Mannington	Amtico	Lymed Grey Wood	AROW7670	Copy/Pantry Areas		09 65 19
I-RF-03	Johnsonite	Arka Tile	850 Cymbal		BOH		09 65 19
I-SS-01	Hanstone	Sterling Grey			Counters		12 36 61
I-TL-01	Stone Source	Graffiti	Arlitharcite	12 x 24	2nd and 3rd floor lobbies and corridors, bathrooms		09 30 00
I-TL-02	Stone Source	Lion Lion	Verde 1 White Negative	8 x 48	Bathroom Accent		09 30 00
I-TL-03	Dalite	Natural Hues	GH63	2 x 8	Bathroom Wall Field Tile		09 30 00
I-TL-04	Cross ville	Glass Blox	Blue Haze	1/2" x 6"	Scholarly Activity		09 30 00
I-RB-01	Johnsonite	24	Grey Haze WG		To Match I-PT-01		09 65 13
I-RB-02	Johnsonite	165	Squished		To Match I-PT-02		09 65 13
I-RB-03	Johnsonite	291	Laguna		To Match I-PT-03		09 65 13
I-RB-04	Johnsonite	292	Evening Shower		To Match I-PT-08		09 65 13
I-RB-05	Johnsonite	63	Burnt Umber		To Match I-PT-10		09 65 13
I-RB-06	Johnsonite	469	Mystby CG		To Match I-PT-12		09 65 13
I-RB-07	Johnsonite	134	Gold Rush		To Match I-PT-11		09 65 13
I-WD-01	Dodge	Doug Fir		Linear Open Style	Lecture Rooms		09 77 00
I-WD-02	Ruion	Red Oak		Various Panel Types	Lobby		09 77 00
I-WD-03	Dodge	Doug Fir		Millwork	Scholarly Activity, Conference Room		06 40 23
I-WP-01	Tectum	Acoustical Wall and Ceiling Panels	Natural		Lecture Halls		09 84 13
I-WP-02	Armstong	Sound Soak		Refer to Sheets A6.03, A8.30, A8.31, A8.32 for fabric designation.	Tutorial Classrooms, Seminar Rooms, Labs, TEAL, Conference Room, Scholarly Activity		09 84 33

FINISH PLAN LEGEND:

WS-1	SHADE TYPE 1 12 24 13	EXT CPT	SEE DETAIL T1 ON A8.11	CPT TL	SEE DETAIL T4 ON A8.11
WS-2	SHADE TYPE 2 12 24 13	EXT TL	SEE DETAIL T2 ON A8.11	CPT RF	SEE DETAIL T5 ON A8.11
WS-3	SHADE TYPE 3 12 24 13	EXT CNT	SEE DETAIL T3 ON A8.11	TL RF	SEE DETAIL T6 ON A8.11

CPT CPT SEE DETAIL T7 ON A8.11

UNIVERSITY OF CALIFORNIA
MERCED
FIRE MARSHAL
Approval of this plan does not authorize or approve any omission or deviation from applicable regulations. Final approval is subject to field inspection One set of approved plans shall be available on the Project site at all times.
Reviewed by: _____
Date: _____
UCM Project #: 300290

NO.	DATE	DESCRIPTION	NO.	DATE	DESCRIPTION
2.	02.27.2014	ADDENDUM NO.2			
	12.20.2013	100% CONSTRUCTION DOCUMENTS			
	10.21.2013	90% CONSTRUCTION DOCUMENTS			
	07.26.2013	50% CONSTRUCTION DOCUMENTS			
	04.15.2013	100% DESIGN DEVELOPMENT			
	01.28.2013	100% SCHEMATIC DESIGN			

Solomon Cordwell Buenz
www.scb.com
Chicago 312.896.1100
San Francisco 415.216.2450
Architecture Planning Interior Design

CLASSROOM AND ACADEMIC OFFICE BUILDING
UCMERCED

© 2012 Solomon Cordwell Buenz

LICENSED ARCHITECT 09-30-2015 STATE OF CALIFORNIA

FIRST FLOOR FINISH PLAN & SCHEDULE

Scale: 1/8" = 1'-0"
Drawn By: OG
Project Number: 2012040
Sheet Number: A8.30

CLADDING LOAD TABLES

PLAN LINEWORK STYLE	CLADDING DESCRIPTION	SUPERIMPOSED DEAD LOAD
	EXTERIOR CLADDING	350 PLF (25 PSF x 14'-0" HEIGHT)
	EXTERIOR CLADDING	450 PLF (25 PSF x 18'-0" HEIGHT)

FLAT LOAD TABLES

PLAN FILL PATTERN	FLOOR USAGE	DEAD LOAD* GRAVITY / SEISMIC	SUPERIMPOSED DEAD LOAD	LIVE LOAD	WIND LOAD
	OFFICES AND CLASSROOMS	79 PSF 89 PSF**	14 PSF	50 PSF**	N.A.
	STAIR (TYP.)	79 PSF 89 PSF***	14 PSF	100 PSF	N.A.
	CORRIDORS ABOVE LEVEL 1	79 PSF 89 PSF***	14 PSF	100 PSF	N.A.
	INSULATED ROOF	20 PSF 20 PSF	10 PSF	20 PSF	N.A.
	ROOF (NON-MECHANICAL)	99 PSF 94 PSF***	25 PSF	20 PSF	N.A.
	ROOF (MECHANICAL)	214 PSF**** 174 PSF****	50 PSF	20 PSF	N.A.
	ROOF (BALLASTED)	35 PSF 35 PSF	10 PSF	20 PSF	N.A.
	PV SUPPORT	10 PSF 6 PSF	0	20 PSF	25 PSF UPWARD 10 PSF DOWNWARD

* EXCLUDES FRAMING SELF WEIGHT.
** PARTITIONS INCLUDED AS AN ADDITIONAL 15 PSF UNREDUCIBLE LIVE LOAD.
*** SEISMIC WEIGHT INCLUDES PARTITIONS AS 10 PSF AT FLOORS, 5 PSF AT ROOF.
**** INCLUDES CURBS, PADS, MECHANICAL, AND MISCELLANEOUS EQUIPMENT.

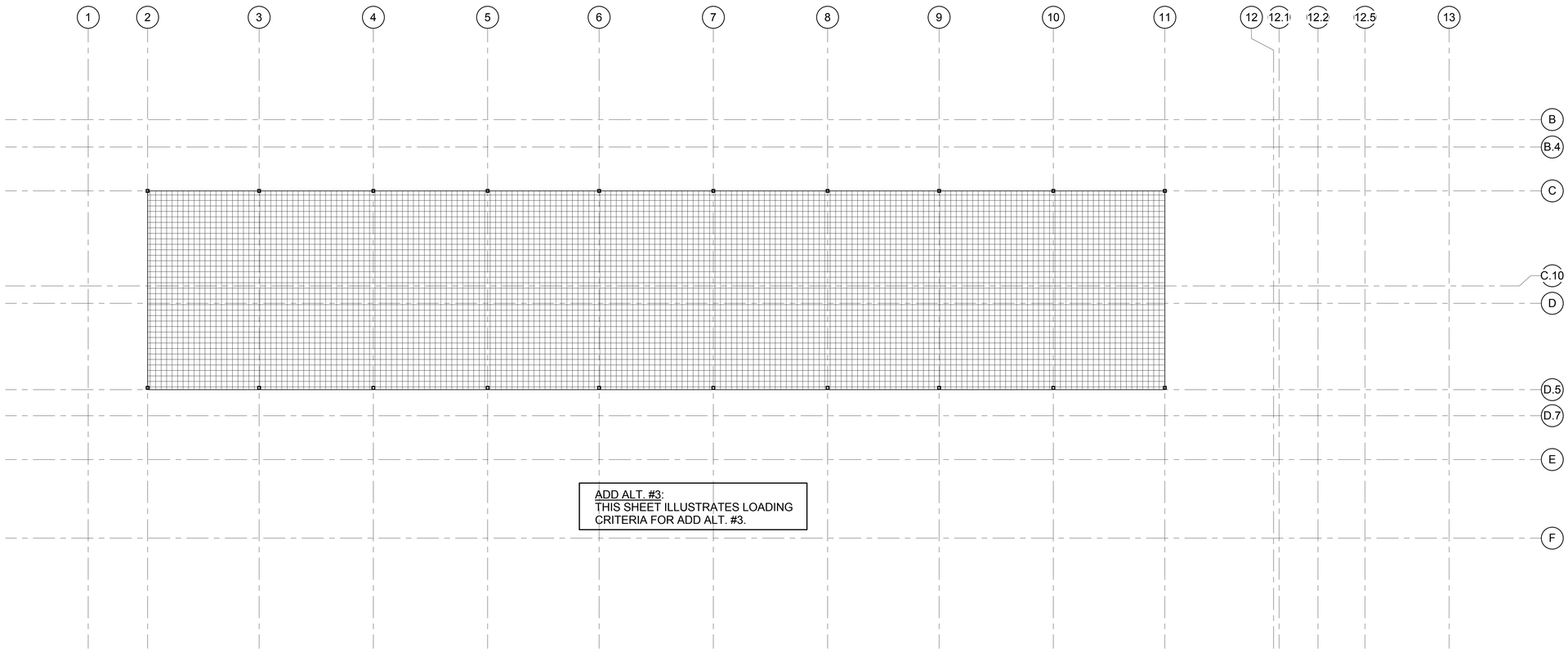

ADD ALT. #3:
THIS SHEET ILLUSTRATES LOADING CRITERIA FOR ADD ALT. #3.

Solomon Cordwell Buenz
www.scb.com
Chicago 312.896.1100
San Francisco 415.216.2450
Architecture Planning Interior Design

RUTHERFORD + CHEKENE
Structural | Geotechnical Engineers
55 Second Street Suite 600
San Francisco CA 94105
T 415 568 4400
F 415 618 0684
www.ruthchek.com

UNIVERSITY OF CALIFORNIA
MERCED
FIRE MARSHAL
Approval of this plan does not authorize or approve any omission or deviation from applicable regulations. Final approval is subject to field inspection One set of approved plans shall be available on the Project site at all times.
Reviewed by: _____
Date: _____
UCM Project #: 350290

NO.	DATE	DESCRIPTION	NO.	DATE	DESCRIPTION
2	02.27.2014	ADDENDUM #2			
	12.20.2013	100% CONSTRUCTION DOCUMENTS			
	10.21.2013	90% CONSTRUCTION DOCUMENTS			
	07.26.2013	50% CONSTRUCTION DOCUMENTS			
	04.15.2013	100% DESIGN DEVELOPMENT			
	01.28.2013	100% SCHEMATIC DESIGN			

UCMERCED

© 2012 Solomon Cordwell Buenz

REGISTERED PROFESSIONAL ENGINEER
4088
Exp. 06.06.15
STRUCTURAL
STATE OF CALIFORNIA

PV SUPPORT LOADING CRITERIA

Scale: 1/8" = 1'-0"
Drawn By: Author
Project Number:

Sheet Number: S0.07

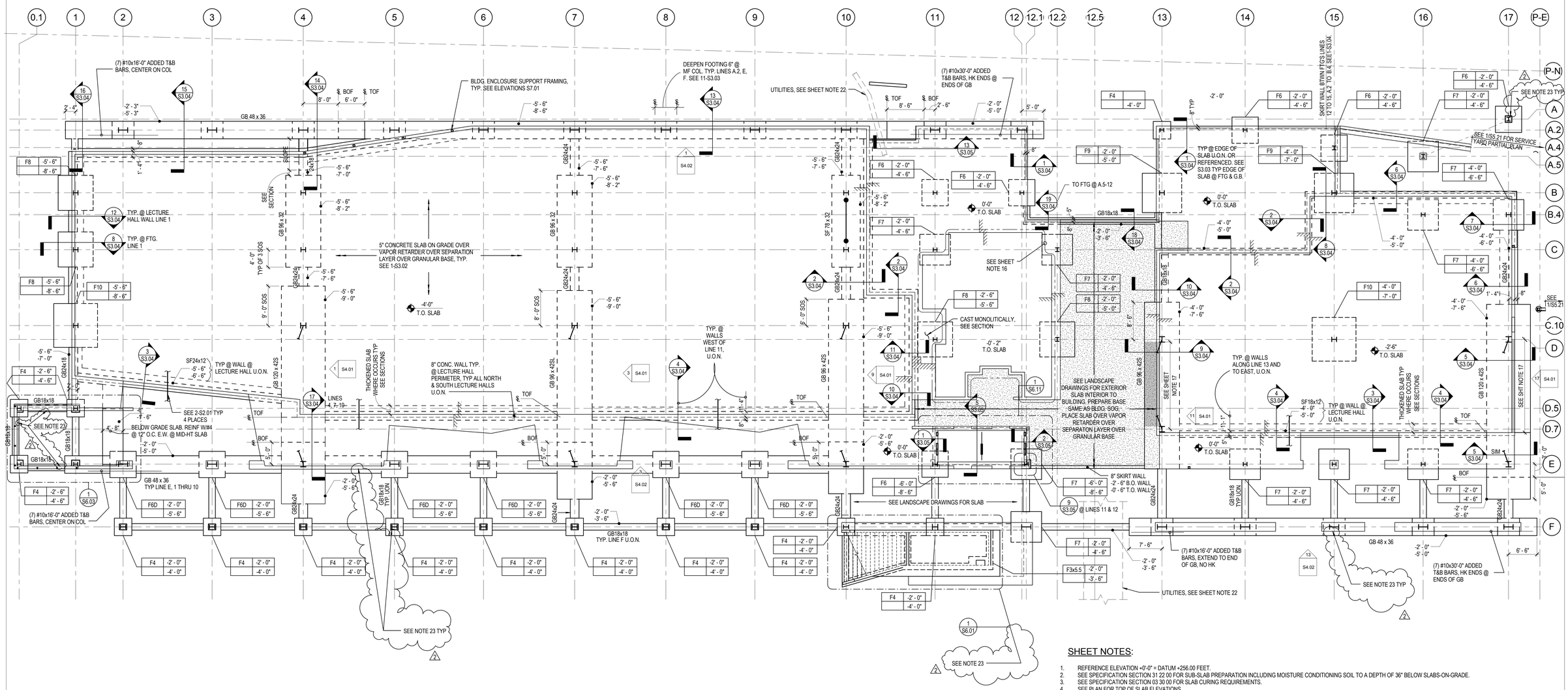

SHEET NOTES:

1. REFERENCE ELEVATION +0'-0" = DATUM +256.00 FEET.
2. SEE SPECIFICATION SECTION 31 22 00 FOR SUB-SLAB PREPARATION INCLUDING MOISTURE CONDITIONING SOIL TO A DEPTH OF 36" BELOW SLABS-ON-GRADE.
3. SEE SPECIFICATION SECTION 03 30 00 FOR SLAB CURING REQUIREMENTS.
4. SEE PLAN FOR TOP OF SLAB ELEVATIONS.
5. SEE A0.61 AND A2.11 FOR DIMENSIONS AND ELEVATIONS NOT SHOWN.
6. SEE A0.61 AND A2.11 FOR LOCATIONS & EXTENTS OF STEPS, DEPRESSIONS, PITS, SLOPES, & CURBS IN SLABS.
7. SEE A0.61 AND A2.11 FOR LOCATION & CONFIGURATION OF PILASTERS.
8. SEE M/E/P DRAWINGS FOR SIZES AND LOCATIONS OF EQUIPMENT SUPPORT PADS AND CURBS, AND FOR EQUIPMENT ANCHORAGES AND BRACING.
9. SEE SHEET S0.01 FOR TYPICAL FRAMING LEGEND AND ABBREVIATIONS.
10. SEE SHEET S0.02 FOR GENERAL NOTES.
11. SEE SHEET S3.01 AND S3.02 FOR TYPICAL CONCRETE DETAILS.
12. SEE SHEET S3.03 FOR TYPICAL FOUNDATION DETAILS.
13. SEE SHEETS S4 SERIES FOR LATERAL FORCE RESISTING SYSTEM ELEVATIONS AND DETAILS.
14. SEE SHEET S5.06 FOR NON-FRAME STEEL COLUMN SCHEDULE.
15. ALTHOUGH WATERPROOFING AND DRAINAGE ITEMS ARE SOMETIMES SHOWN ON STRUCTURAL DRAWINGS FOR REFERENCE, SPECIFICATION AND DETAILING OF THESE ITEMS ARE SHOWN AND DETAILED ON THE ARCHITECTURAL DRAWINGS.
16. SLABS TO RECEIVE TILE OR TOPPING SLABS SHALL BE PLACED WITHOUT JOINTS & SHALL BE MOIST CURED.
17. SEQUENCE LECTURE HALL WALL AND ADJACENT SLAB CONSTRUCTION AS REQUIRED TO PERMIT MAKING BRACE CONNECTION AND INSTALLING DRAG BAR. SEE 1-S4.04.
18. GRADE BEAMS CENTER ON GRID LINES U.O.N.
19. SAD FOR CONFIGURATION AT TOPS OF WALLS & CURBS.
20. SAD AND SLD FOR INTERFACE BETWEEN STRUCTURAL ELEMENTS & LANDSCAPE SLABS.
21. ALTHOUGH CURBS, PILASTERS, BENCHES, AND OTHER NON-STRUCTURAL CONCRETE ELEMENTS ARE SHOWN ON THE STRUCTURAL DRAWINGS FOR REFERENCE, THEIR EXTENT, LOCATION, CONFIGURATION, ELEVATION ARE SHOWN ON THE ARCHITECTURAL DRAWINGS.
22. MAJOR UTILITY RUNS SUCH AS M.E.& P LINES SHOWN ENTERING BUILDING FOR COORDINATION PURPOSES ONLY. REFER TO APPROPRIATE DISCIPLINES FOR SIZE, NUMBER, LOCATION, ELEVATION, DETAILS, ETC. OF UTILITIES. NOT ALL UTILITIES SHOWN.
23. REFER TO SPECIFICATION SECTION 03 32 00 FOR EXTERIOR EXPOSED TO VIEW CONCRETE AT PILASTERS, STEM WALLS, CURBS, SEATS, AND ALL CONCRETE AT STAIR 1 EXCEPT FOUNDATION CONCRETE. FOUNDATION CONCRETE FOR FOR THESE ELEMENTS IS INCLUDED IN SPECIFICATION SECTION 03 30 00.

LEGEND

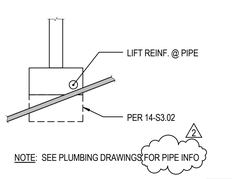

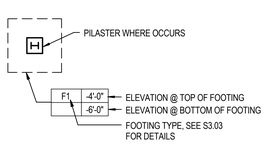

SPREAD FOOTING

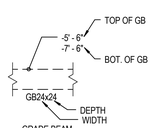

GRADE BEAM

GRADE BEAM ELEVATION NOTES:

1. SEE S3.03 FOR DETAILS.
2. SEE PLAN FOR TOP/BOT OF GRADE BEAM TYP.
3. TOP / BOT GB 18 -2'-0" / -3'-6" TYP U.O.N.
4. TOP / BOT GB 24 -2'-0" / -4'-0"TYP U.O.N.

Solomon Cordwell Buenz
www.scb.com
Chicago 312.896.1100
San Francisco 415.216.2450
Architecture Planning Interior Design

RUTHERFORD + CHEKENE
Structural | Geotechnical Engineers
55 Second Street Suite 600
San Francisco CA 94105
T 415 568 4400
F 415 618 0684
www.ruthchek.com

UNIVERSITY OF CALIFORNIA
MERCED
FIRE MARSHAL
Approval of this plan does not authorize or approve any omission or deviation from applicable regulations. Final approval is subject to field inspection One set of approved plans shall be available on the Project site at all times.
Reviewed by: _____
Date: _____
UCM Project #: 300290

NO.	DATE	DESCRIPTION	NO.	DATE	DESCRIPTION
2	02.27.2014	ADDENDUM #2			
	12.20.2013	100% CONSTRUCTION DOCUMENTS			
	10.21.2013	90% CONSTRUCTION DOCUMENTS			
	07.26.2013	50% CONSTRUCTION DOCUMENTS			
	04.15.2013	100% DESIGN DEVELOPMENT			
	01.28.2013	100% SCHEMATIC DESIGN			

UCMERCED

© 2012 Solomon Cordwell Buenz

FOUNDATION & FIRST FLOOR FRAMING PLAN

Scale: As indicated

Drawn By: Author

Project Number:

Sheet Number: S2.01

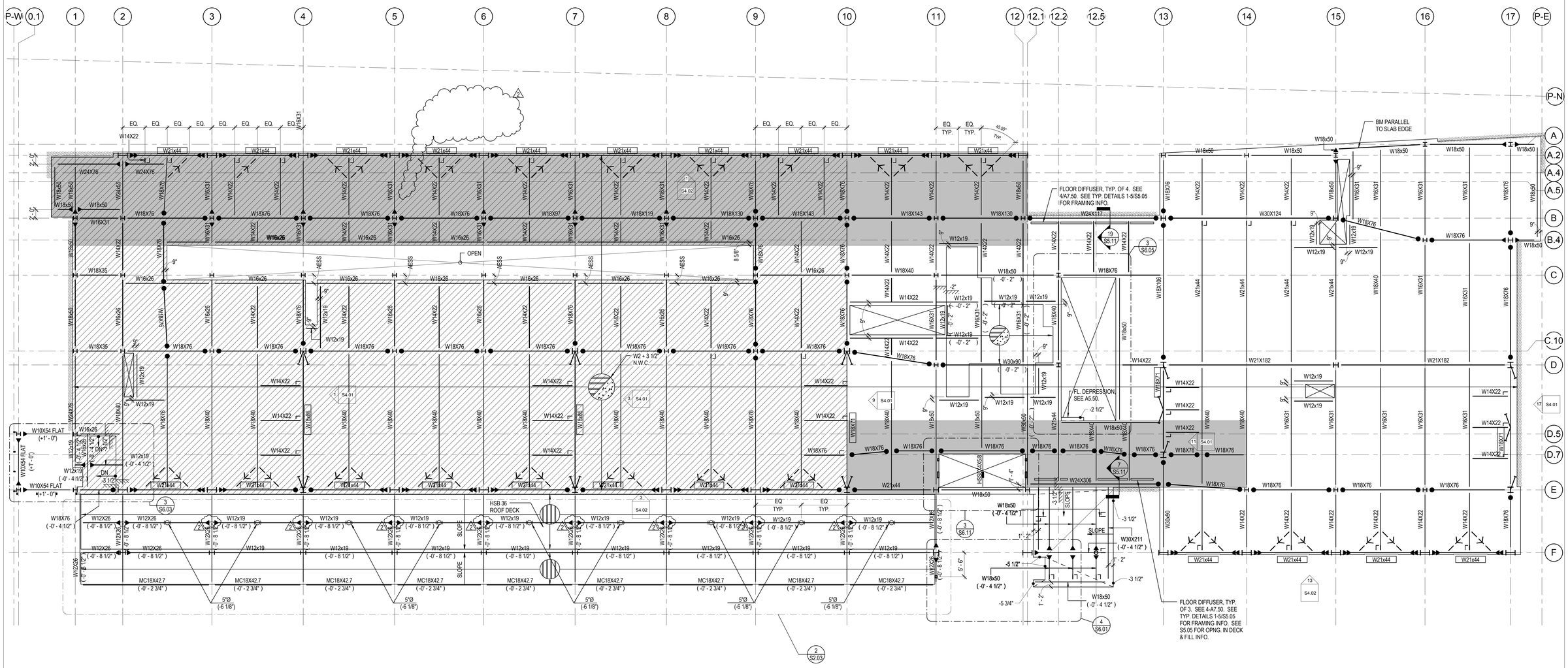

THIRD FLOOR FRAMING PLAN 1

1/8" = 1'-0"

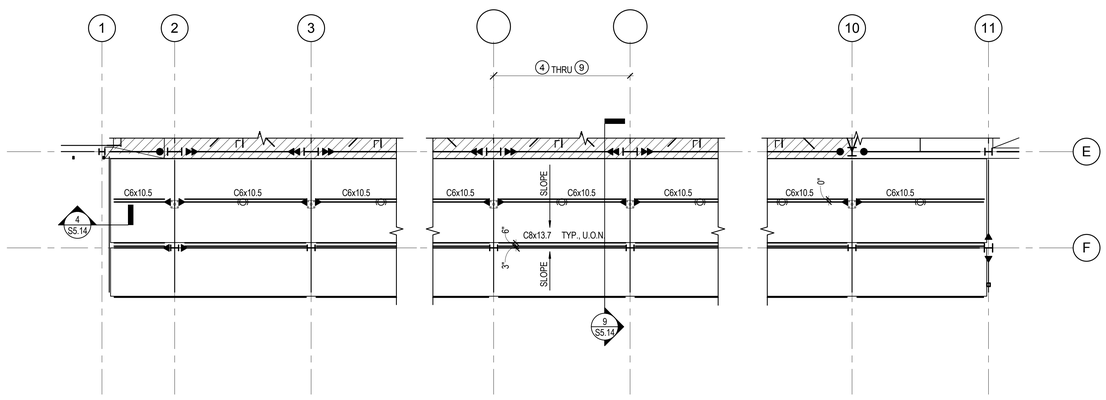

NOTE: PARTIAL PLAN SHOWS FRAMING ABOVE W & MC BM. FRAMING.

PARTIAL PLAN - EXT. WALKWAY ROOF FRAMING 2

1/8" = 1'-0"

LEGEND

INDICATES AREAS OF SEQUENCED CONCRETE FILL ON STEEL DECK, SEE 1-S5.08.

INDICATES AREA WITH SLAB REINFORCEMENT OF #5 @ 6" O.C., E.W. EXTEND LAP LENGTH INTO AREAS OF TYPICAL REINF.

INDICATES LOCATION OF CAST-IN CHANNEL ANCHORS, SEE A3.10 & A3.11 FOR TYPES AND EXTENTS OF CLADDING. SEE 9B-S5.04 FOR CAST-IN CHANNEL ANCHOR.

SHEET NOTES:

1. SEE SHEET NOTES S2.02.

PLAN NORTH

Solomon Cordwell Buenz
www.scb.com
Chicago 312.896.1100
San Francisco 415.216.2450
Architecture Planning Interior Design

RUTHERFORD + CHEKENE
Structural | Geotechnical Engineers
55 Second Street Suite 600
San Francisco CA 94105
T 415 568 4400
F 415 618 0684
www.ruthchek.com

UNIVERSITY OF CALIFORNIA
MERCED
FIRE MARSHAL
Approval of this plan does not authorize or approve any omission or violation of any applicable regulations. Final approval is subject to field inspection. One set of approved plans shall be available on the Project site at all times.
Reviewed by: _____
Date: _____
UCM Project #: 300290

NO.	DATE	DESCRIPTION	NO.	DATE	DESCRIPTION
2	02.27.2014	ADDENDUM #2			
	12.20.2013	100% CONSTRUCTION DOCUMENTS			
	10.21.2013	90% CONSTRUCTION DOCUMENTS			
	07.26.2013	50% CONSTRUCTION DOCUMENTS			
	04.15.2013	100% DESIGN DEVELOPMENT			
	01.28.2013	100% SCHEMATIC DESIGN			

UCMERCED

© 2012 Solomon Cordwell Buenz

REGISTERED PROFESSIONAL ENGINEER 4088 Exp. 06.06.14 STRUCTURAL STATE OF CALIFORNIA

THIRD FLOOR FRAMING PLAN

Scale: 1/8" = 1'-0"

Drawn By: Author

Project Number:

Sheet Number: S2.03

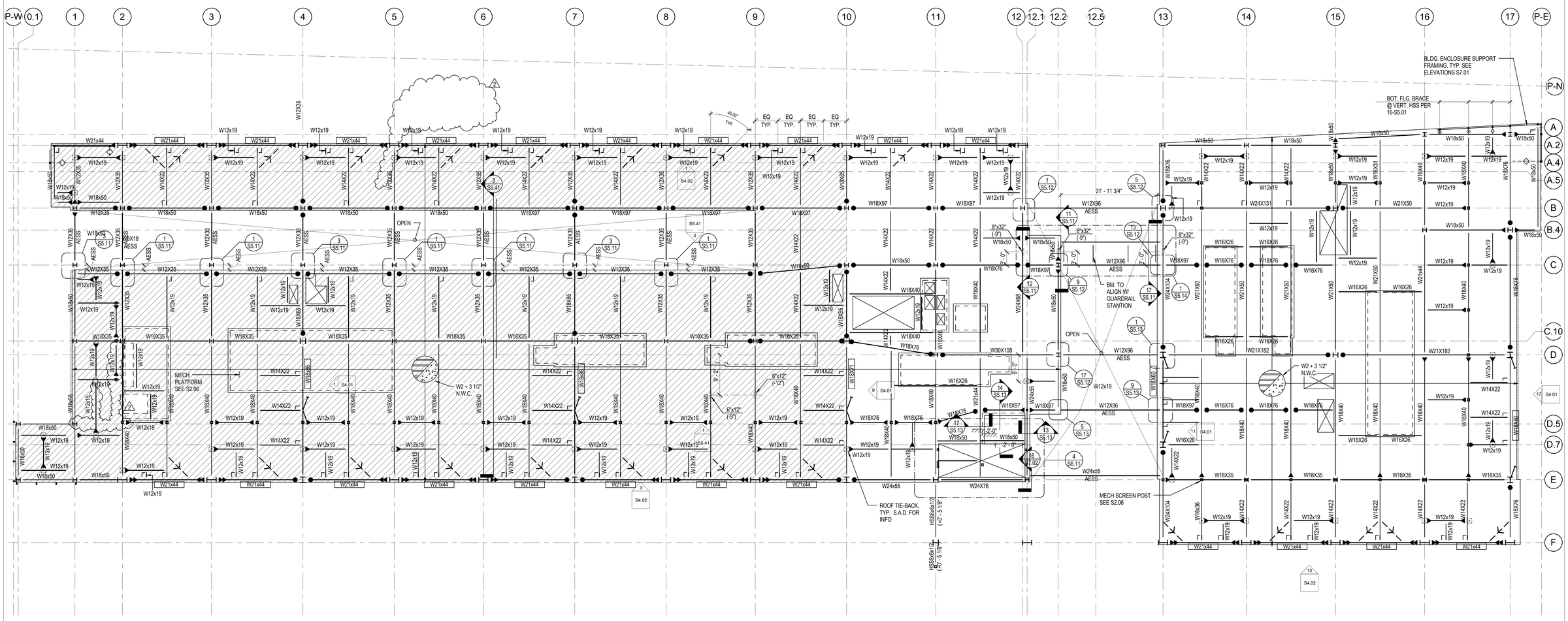

LEGEND

INDICATES LOCATION OF CAST-IN CHANNEL ANCHORS, SEE A3.10 & A3.11 FOR TYPES AND EXTENTS OF CLADDING. SEE 9B-S5.04 FOR CAST-IN CHANNEL ANCHOR.

INDICATES ROOF TIE-BACK ANCHOR , S.A.D. FOR LOCATION. SEE 17-S5.32 FOR CONNECTION INFO.

SHEET NOTES:

1. SEE SHEET NOTES S2.02.

PLAN NORTH

Solomon Cordwell Buenz
www.scb.com

Chicago 312.896.1100
San Francisco 415.216.2450

Architecture Planning Interior Design

RUTHERFORD + CHEKENE
Structural | Geotechnical Engineers
55 Second Street Suite 600
San Francisco CA 94105
T 415 568 4400
F 415 618 0684
www.ruthchek.com

UNIVERSITY OF CALIFORNIA
MERCED
FIRE MARSHAL
Approval of this plan does not authorize or approve any omission or deviation from applicable regulations. Final approval is subject to field inspection One set of approved plans shall be available on the Project site at all times.
Reviewed by: _____
Date: _____
UCM Project #: 500280

NO.	DATE	DESCRIPTION	NO.	DATE	DESCRIPTION
2	02.27.2014	ADDENDUM #2			
	12.20.2013	100% CONSTRUCTION DOCUMENTS			
	10.21.2013	90% CONSTRUCTION DOCUMENTS			
	07.26.2013	50% CONSTRUCTION DOCUMENTS			
	04.15.2013	100% DESIGN DEVELOPMENT			
	01.28.2013	100% SCHEMATIC DESIGN			

UCMERCED

© 2012 Solomon Cordwell Buenz

REGISTERED PROFESSIONAL ENGINEER
STEVEN C. WEBER
No. 45306
Exp. 06.30.15
STRUCTURAL
STATE OF CALIFORNIA

ROOF FRAMING PLAN

Scale: 1/8" = 1'-0"

Drawn By: Author

Project Number:

Sheet Number: S2.04

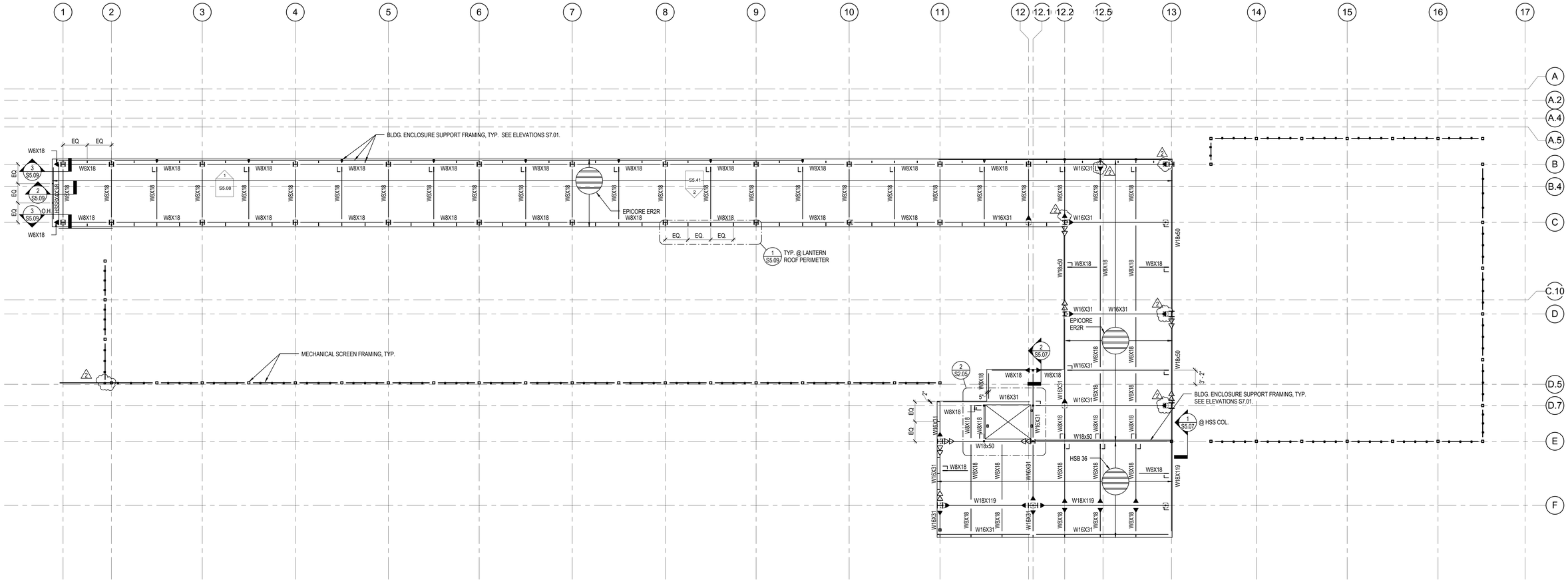

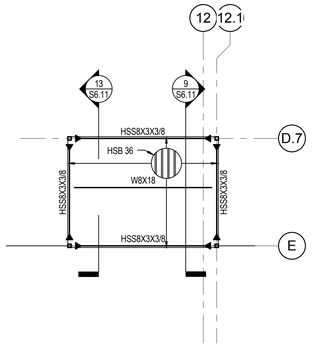

PARTIAL PLAN - ELEVATOR PENTHOUSE 2
1/4" = 1'-0"

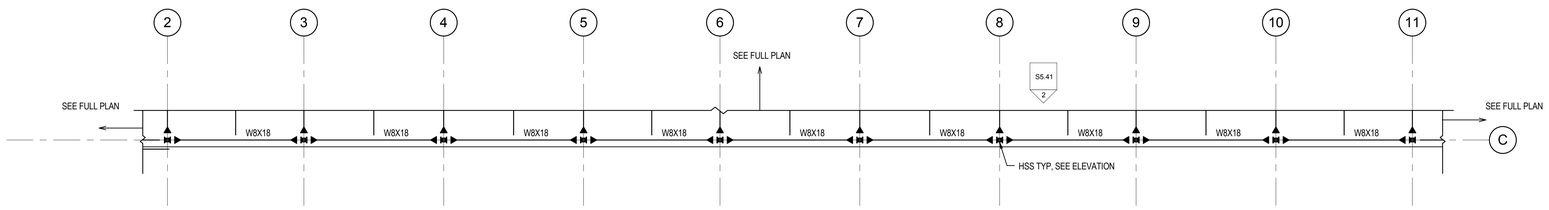

ADD ALT #3

PARTIAL PLAN - LANTERN ROOF @ P.V. STRUCTURE 13
1/8" = 1'-0"

NOTE:
1. PARTIAL PLAN SHOWS ADD ALT. #3 WORK LINE C, LINES 2 TO 11 ONLY.
2. W BMS & COLS SHOWN FOR CONTEXT, ARE INCLUDED IN BASE BID.

LEGEND

INDICATES ROOF TIE-BACK ANCHOR , S.A.D. FOR LOCATION. SEE 17-S5.32 FOR CONNECTION INFO.

SHEET NOTES:

1. SEE SHEET NOTES S2.04.
2. TOP OF STEEL @ LANTERN ROOF +54' - 6 1/2" TYP., U.O.N.
3. TOP OF STEEL @ ELEVATOR PENTHOUSE +58' - 1" TYP., U.O.N.
4. SEE ELEVATIONS AND SECTIONS FOR SCREEN MEMBER SIZES AND TOP OF STEEL.
5. PLAN TOLERANCE AT EDGE OF DECK AT BUILDING EXTERIOR IS ±3/8" TO ACCOMODATE BUILDING ENCLOSURE. REFER TO EDGE OF DECK DETAIL 9-S5.09.
6. EDGE OF DECK AT BUILDING ENCLOSURE REQUIRES SURVEY TO VERIFY CONSTRUCTION TOLERANCE. REFER TO EDGE OF DECK DETAIL 9-S5.09.
7. SEE MECHANICAL DRAWINGS FOR EXTENT & LOCATIONS OF PIPE SUPPORTS ATTACHED TO MECHANICAL SCREEN SUPPORT POSTS.
8. ALL MECHANICAL SCREEN SUPPORT FRAMING HOT-DIPPED GALVANIZED, U.O.N.

PLAN NORTH

Solomon Cordwell Buenz
www.scb.com
Chicago 312.896.1100
San Francisco 415.216.2450
Architecture Planning Interior Design

RUTHERFORD + CHEKENE
Structural | Geotechnical Engineers
55 Second Street Suite 600
San Francisco CA 94105
T 415 568 4400
F 415 618 0684
www.ruthchek.com

UNIVERSITY OF CALIFORNIA
MERCED
FIRE MARSHAL
Approval of this plan does not authorize or approve violations of building code or other ordinances or regulations. Final approval is subject to field inspection. One set of approved plans shall be available on the Project site at all times.
Reviewed by: _____
Date: _____
UCM Project # 300290

NO.	DATE	DESCRIPTION	NO.	DATE	DESCRIPTION
2	02.27.2014	ADDENDUM #2			
	12.20.2013	100% CONSTRUCTION DOCUMENTS			
	10.21.2013	90% CONSTRUCTION DOCUMENTS			
	07.26.2013	50% CONSTRUCTION DOCUMENTS			
	04.15.2013	100% DESIGN DEVELOPMENT			
	01.28.2013	100% SCHEMATIC DESIGN			

UCMERCED

© 2012 Solomon Cordwell Buenz

REGISTERED PROFESSIONAL ENGINEER
STEVEN C. BUELL
No. 35515
STATE OF CALIFORNIA

LANTERN ROOF FRAMING PLAN

Scale: As indicated
Drawn By: Author
Project Number:

Sheet Number:
S2.05

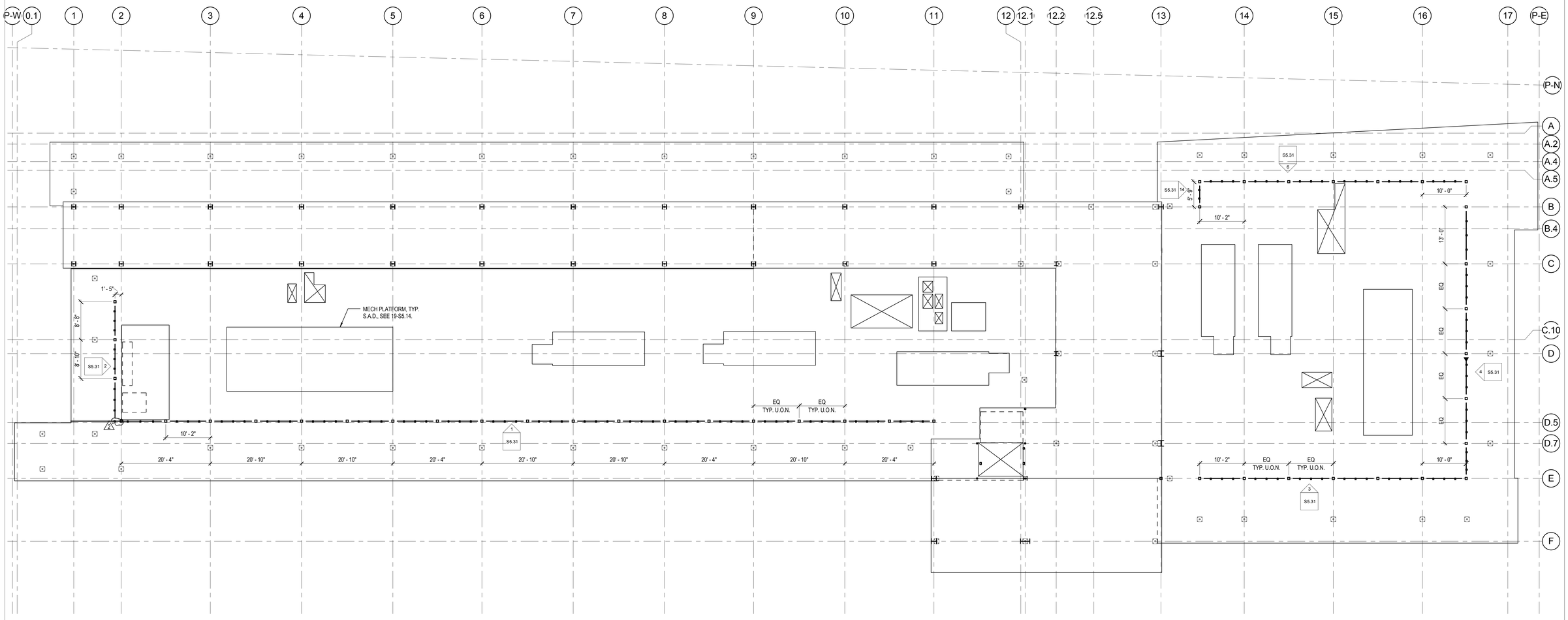

LEGEND

⊡	INDICATES ROOF TIE-BACK ANCHOR , S.A.D. FOR LOCATION. SEE 17-S5.32 FOR CONNECTION INFO.

SHEET NOTES:

1. SEE SHEET NOTES S2.05.
2. SEE ELEVATIONS AND SECTIONS FOR SCREEN MEMBER SIZES AND TOP OF STEEL.
3. SEE MECHANICAL DRAWINGS FOR EXTENT & LOCATIONS OF PIPE SUPPORTS ATTACHED TO MECHANICAL SCREEN SUPPORT POSTS.
4. ALL MECHANICAL SCREEN SUPPORT FRAMING HOT-DIPPED GALVANIZED, U.O.N.

PLAN NORTH

Solomon Cordwell Buenz
www.scb.com

Chicago 312.896.1100
San Francisco 415.216.2450

Architecture Planning Interior Design

RUTHERFORD + CHEKENE
Structural | Geotechnical Engineers
55 Second Street Suite 600
San Francisco CA 94105
T 415 568 4400
F 415 618 0684
www.ruthchek.com

UNIVERSITY OF CALIFORNIA
MERCED
FIRE MARSHAL
Approval of this plan does not authorize or approve any omission or deviation from applicable regulations. Final approval is subject to field inspection One set of approved plans shall be available on the Project site at all times.

Reviewed by: _____
Date: _____
UCM Project #: 300290

NO.	DATE	DESCRIPTION	NO.	DATE	DESCRIPTION
2	02.27.2014	ADDENDUM #2			
	12.20.2013	100% CONSTRUCTION DOCUMENTS			
	10.21.2013	90% CONSTRUCTION DOCUMENTS			
	07.26.2013	50% CONSTRUCTION DOCUMENTS			
	04.15.2013	100% DESIGN DEVELOPMENT			
	01.28.2013	100% SCHEMATIC DESIGN			

UCMERCED

© 2012 Solomon Cordwell Buenz

REGISTERED PROFESSIONAL ENGINEER
4080
Exp. 06.06.15
STRUCTURAL
STATE OF CALIFORNIA

MECHANICAL SCREEN FRAMING PLAN

Scale: 1/8" = 1'-0"
Drawn By: Author
Project Number:

Sheet Number: S2.06

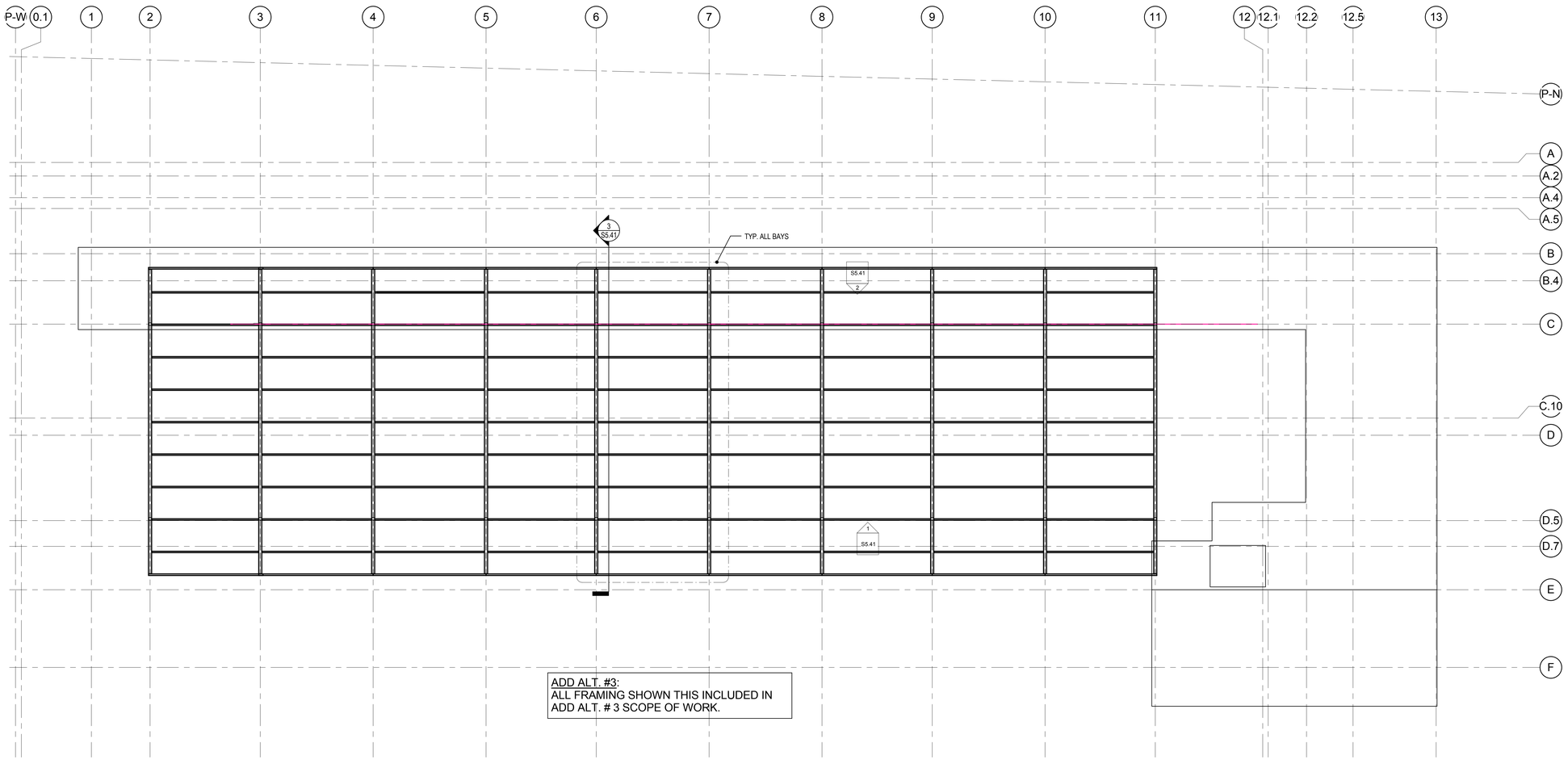

ADD ALT. #3:
ALL FRAMING SHOWN THIS INCLUDED IN ADD ALT. # 3 SCOPE OF WORK.

SHEET NOTES:

1. SEE SHEET NOTES S2.06.
2. TOP OF STEEL 4' - 10" ABOVE LANTERN ROOF ELEVATION (+59' - 7 1/2").
3. SEE MECHANICAL AND ARCHITECTURAL DRAWINGS FOR EXTENT & LOCATIONS OF PHOTO VOLTAIC PANELS.
4. CONTRACTOR TO COORDINATE PANEL CONNECTIONS W/ STEEL FABRICATOR IN ORDER TO PROVIDE PREDRILLED HOLES FOR PANEL CONNECTIONS.
5. ALL PV SUPPORT FRAMING HOT-DIPPED GALVANIZED, U.O.N.

Solomon Cordwell Buenz
www.scb.com
Chicago 312.896.1100
San Francisco 415.216.2450
Architecture Planning Interior Design

RUTHERFORD + CHEKENE
Structural | Geotechnical Engineers
55 Second Street Suite 600
San Francisco CA 94105
T 415 568 4400
F 415 618 0684
www.ruthchek.com

UNIVERSITY OF CALIFORNIA
MERCED
FIRE MARSHAL
Approval of this plan does not authorize or approve any omission or deviation from applicable regulations. Final approval is subject to field inspection One set of approved plans shall be available on the Project site at all times.
Reviewed by: _____
Date: _____
UCM Project #: _____

NO.	DATE	DESCRIPTION	NO.	DATE	DESCRIPTION
2	02.27.2014	ADDENDUM #2			
	12.20.2013	100% CONSTRUCTION DOCUMENTS			
	10.21.2013	90% CONSTRUCTION DOCUMENTS			
	07.26.2013	50% CONSTRUCTION DOCUMENTS			
	04.15.2013	100% DESIGN DEVELOPMENT			
	01.28.2013	100% SCHEMATIC DESIGN			

UCMERCED

© 2012 Solomon Cordwell Buenz

REGISTERED PROFESSIONAL ENGINEER
JOHN R. BOSCH
Exp. 06.30.14
STRUCTURAL
STATE OF CALIFORNIA

PV SUPPORT FRAMING PLAN

Scale: 1/8" = 1'-0"
Drawn By: Author
Project Number:

Sheet Number: 2
S2.07

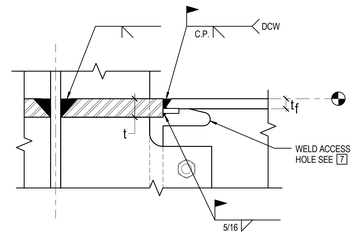

COLLECTOR TOP FLANGE W/ BACKING TO REMAIN WHERE t >= tf + 3/4"

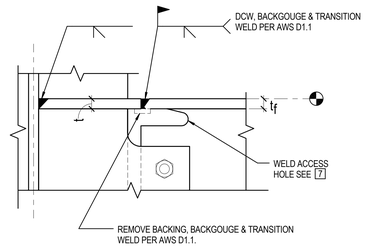

COLLECTOR TOP FLANGE W/ BACKING REMOVED WHERE t < tf + 3/4"

COLLECTOR TOP FLANGE WELD

3" = 1'-0" 4

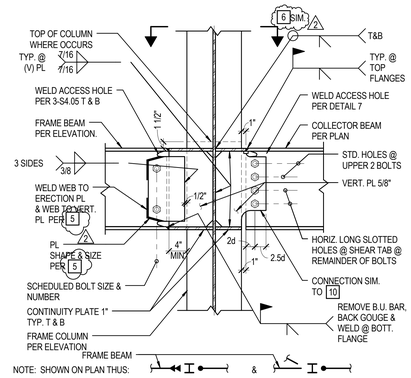

ONE-SIDED FRAME BEAM TO COLUMN WEB CONN.

1" = 1'-0" 11

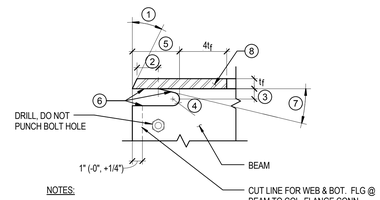

NOTES:

1. BEVEL PER WPS
2. $2t_f$ (±1/4")
3. 3/4 t_f MIN. TO t_f MAX.
4. 1/2" RADIUS (+1/2", OR -1/8")
5. $4t_f$ (±1/2")
6. SURFACE ROUGHNESS NOT EXCEEDING SAMPLE 4, AWS C4.1
7. ANGLE SHALL NOT EXCEED 25°
8. PROTECTED ZONE OF BEAM FLANGE

TOP FLANGE WELDED WELD ACCESS HOLE

3" = 1'-0" 7

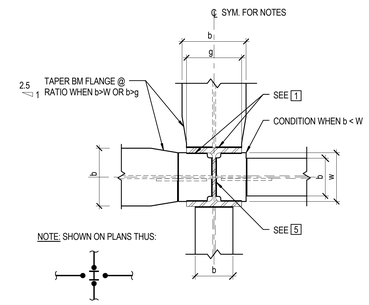

WELDED TOP BM. FLANGE TO BOTH COL. FLANGE & WEB CONN.

1" = 1'-0" 3

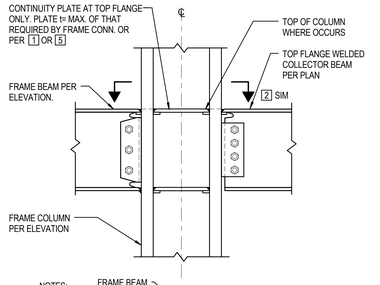

NOTES:
1. SHOWN ON PLAN THUS:
2. SEE 1 FOR INFO NOT NOTED.

WELDED TOP BM. FLANGE TO FRAME COLUMN CONN.

1" = 1'-0" 10

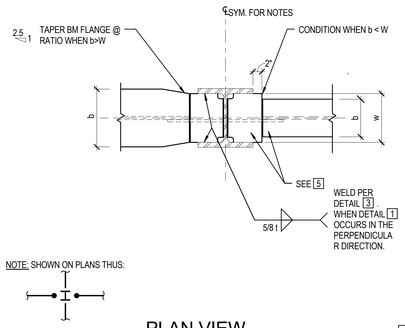

PLAN VIEW

1" = 1'-0" 6

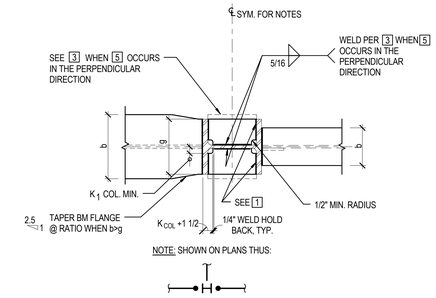

PLAN VIEW

1" = 1'-0" 2

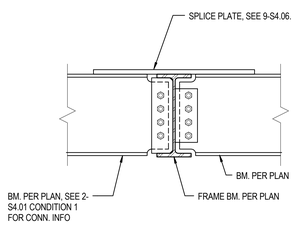

1" = 1'-0" 13

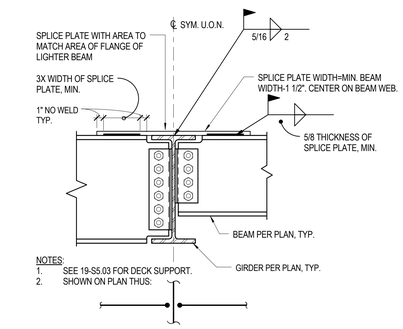

NOTES:
1. SEE 19-S5.03 FOR DECK SUPPORT.
2. SHOWN ON PLAN THUS:

WELDED TOP FLANGE BEAM TO GIRDER CONNECTION

9

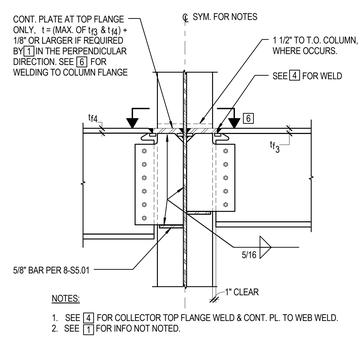

NOTES:
1. SEE 4 FOR COLLECTOR TOP FLANGE WELD & CONT. PL. TO WEB WELD.
2. SEE 1 FOR INFO NOT NOTED.

WELDED TOP BM. FLANGE TO COL. WEB CONN.

1" = 1'-0" 5

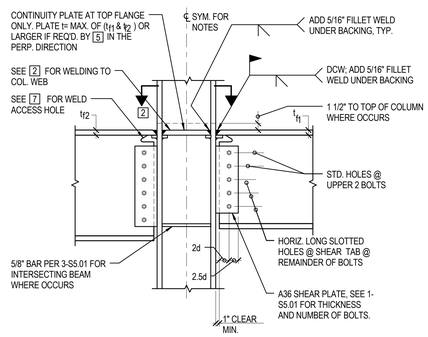

WELDED TOP BM. FLANGE TO COL.FLANGE CONN.

1" = 1'-0" 1

NOTE: ALL WELDS THIS SHEET ARE DEMAND CRITICAL WELDS. SEE SPECIFICATION SECTION 05 12 00

Solomon Cordwell Buenz
www.scb.com
Chicago 312.896.1100
San Francisco 415.216.2450
Architecture Planning Interior Design

RUTHERFORD + CHEKENE
Structural | Geotechnical Engineers
55 Second Street Suite 600
San Francisco CA 94105
T 415 568 4400
F 415 618 0684
www.ruthchek.com

UNIVERSITY OF CALIFORNIA
MERCED
FIRE MARSHAL
Approval of this plan does not authorize or approve violations of building code or other ordinances or regulations. Final approval is subject to field inspection One set of approved plans shall be available on the Project site at all times.
Reviewed by:
Date:
UCM Project #: 300290

NO.	DATE	DESCRIPTION	NO.	DATE	DESCRIPTION
2	02.27.2014	ADDENDUM #2			
	12.20.2013	100% CONSTRUCTION DOCUMENTS			
	10.21.2013	90% CONSTRUCTION DOCUMENTS			
	07.26.2013	50% CONSTRUCTION DOCUMENTS			
	04.15.2013	100% DESIGN DEVELOPMENT			
	01.28.2013	100% SCHEMATIC DESIGN			

UCMERCED

© 2012 Solomon Cordwell Buenz

REGISTERED PROFESSIONAL ENGINEER
JOHN
No. 35515
STATE OF CALIFORNIA

COLLECTOR DETAILS

Scale: As indicated
Drawn By: Author
Project Number:
Sheet Number: **S4.06**

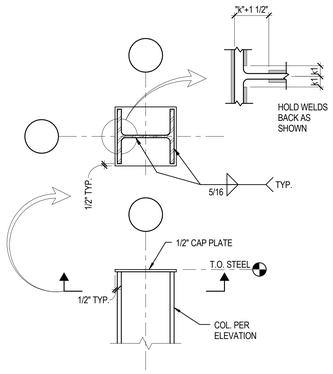

TYP. TOP OF COLUMN 20

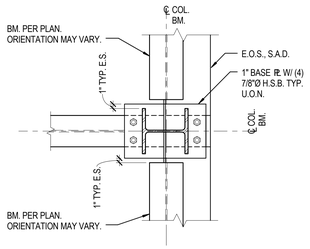

PLAN SECTION

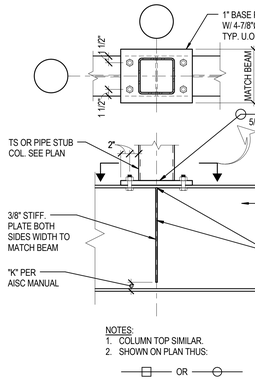

W BEAM BELOW HSS BEAM 12

1" = 1'-0"

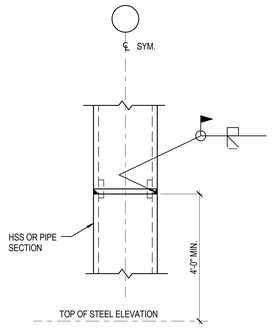

HSS GRAVITY COLUMN SPLICE 8

1" = 1'-0"

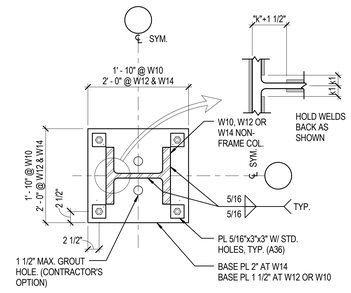

PLAN SECTION

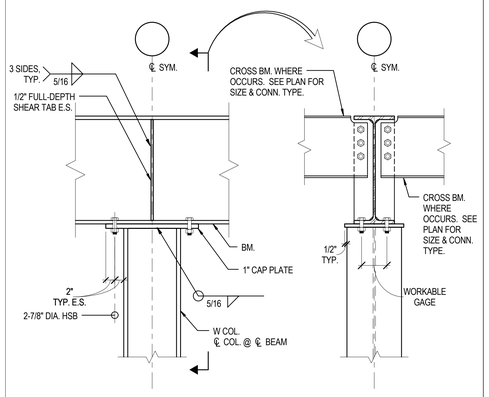

W COLUMN BELOW WIDE FLANGE BEAM 19

1" = 1'-0"

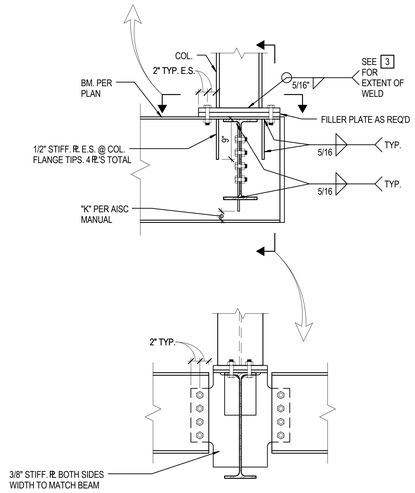

NOTE: CONNECTION OF W COLUMN TOP TO UNDERSIDE OF WIDE FLANGE BEAM SEE # .

1" = 1'-0" 15

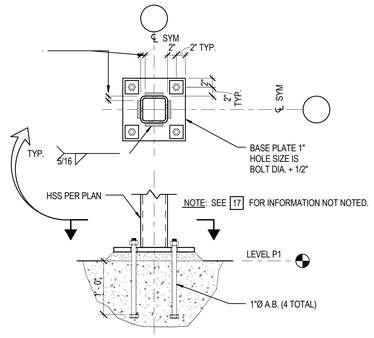

HSS COLUMN BASE PLATE 11

1" = 1'-0"

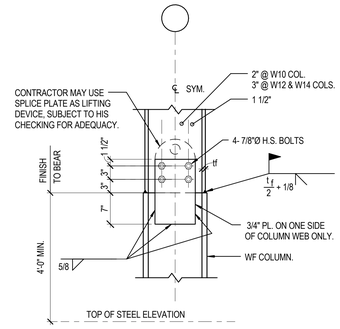

WF GRAVITY COLUMN SPLICE 7

1" = 1'-0"

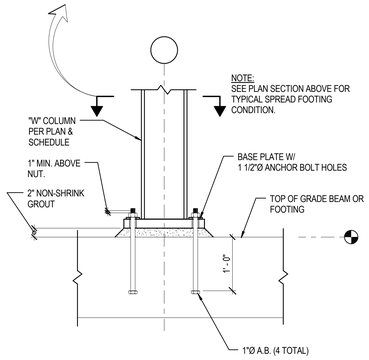

WF COLUMN BASE CONNECTION 3

1" = 1'-0"

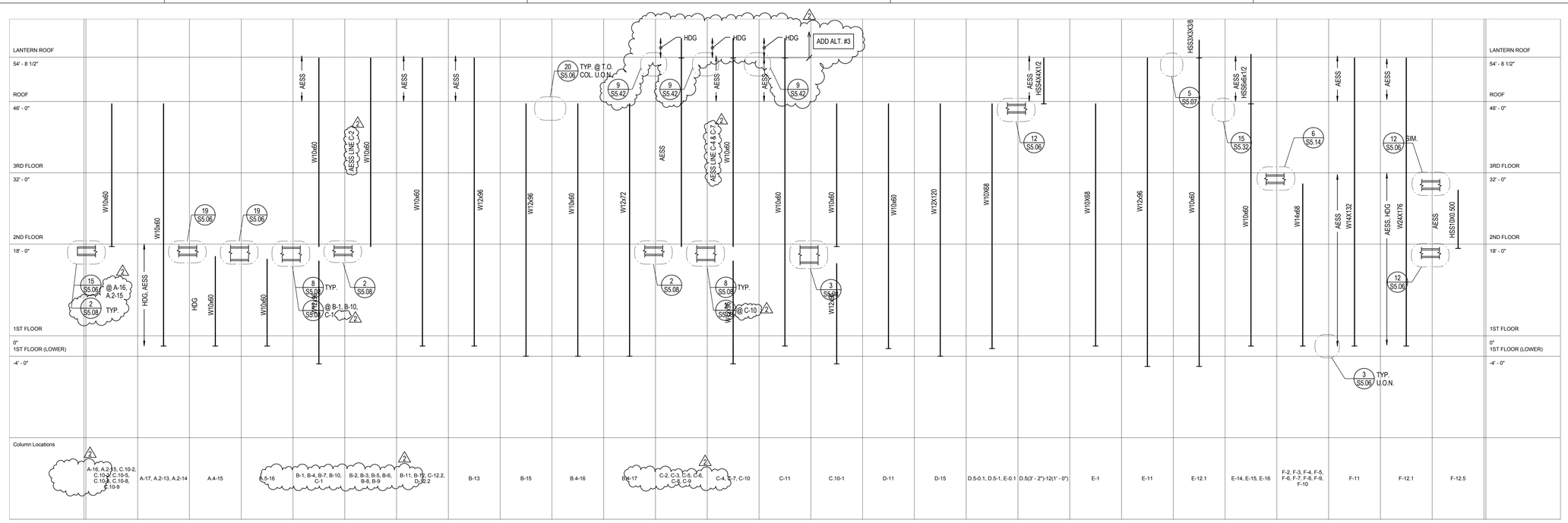

NOTES:
1. NON-FRAME STEEL COLUMNS SUPPORTING BUILDING FLOORS & ROOFS SHOWN THIS SCHEDULE.
2. SEE ELEVATIONS ON S4 SERIES FOR COLUMNS AT BRACED FRAMES AND MOMENT FRAMES.
3. SEE ELEVATIONS ON S5.21 FOR POSTS AT SERVICE YARD.
4. SEE ELEVATIONS ON S5.31 FOR MECH. SCREEN POSTS ABOVE ROOF LEVEL.
5. SEE ELEVATIONS ON S6.01 FOR STAIR 1 LANDING SUPPORT POST.
6. SEE ELEVATIONS S6.03 FOR FOR BUILDING ENCLOSURE SUPPORT POSTS AROUND STAIR 2.
7. SEE ELEVATIONS S6.11 FOR ELEVATOR GUIDE RAIL SUPPORT POSTS AND ELEVATOR PENTHOUSE COLUMNS.
8. SEE ELEVATIONS S7 SERIES FOR BUILDING ENCLOSURE SUPPORT POSTS.

ADD ALT. #3:
ADD HSS POSTS ABOVE LANTERN ROOF LINE C, LINES 2 THROUGH 11 2

GRAVITY COLUMN SCHEDULE 1

Solomon Cordwell Buenz
www.scb.com
Chicago 312.896.1100
San Francisco 415.216.2450
Architecture Planning Interior Design

R+C RUTHERFORD + CHEKENE
Structural | Geotechnical Engineers
55 Second Street Suite 600
San Francisco CA 94105
T 415 568 4400
F 415 618 0684
www.ruthchek.com

UNIVERSITY OF CALIFORNIA
MERCED
CONDITIONAL
Approval of this plan does not authorize or approve any omission or deviation from applicable regulations. Final approval is subject to field inspection One set of approved plans shall be available on the Project site at all times.
Reviewed by: _____
Date: _____
UCM Project #: 300290

NO.	DATE	DESCRIPTION
2	02.27.2014	ADDENDUM #2
	12.20.2013	100% CONSTRUCTION DOCUMENTS
	10.21.2013	90% CONSTRUCTION DOCUMENTS
	07.26.2013	50% CONSTRUCTION DOCUMENTS
	04.15.2013	100% DESIGN DEVELOPMENT
	01.28.2013	100% SCHEMATIC DESIGN

NO.	DATE	DESCRIPTION

UCMERCED

© 2012 Solomon Cordwell Buenz

LICENSED PROFESSIONAL ENGINEER
CHRISTOPHER A. SHERMAN
No. 3000
STRUCTURAL
STATE OF CALIFORNIA

NON-FRAME STEEL COLUMN SCHEDULE & DETAILS

Scale: As indicated
Drawn By: Author
Project Number:

Sheet Number: S5.06

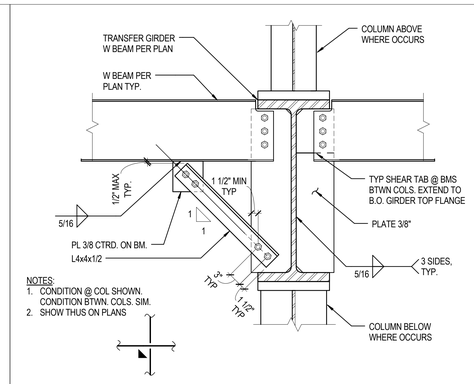

NOTES:
1. CONDITION @ COL SHOWN. CONDITION BTWN. COLS. SIM.
2. SHOW THUS ON PLANS

BOTTOM FLANGE BRACING AT TRANSFER GIRDER

1" = 1'-0" 8

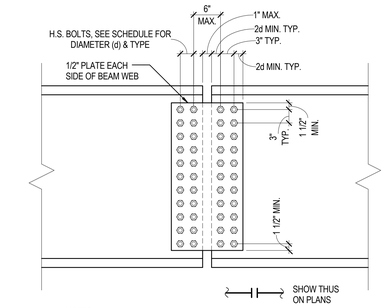

NOTES:
1. SEE "BOLTED SHEAR PLATE CONNECTION SCHEDULE" WHERE " SCHEDULE " IS REFERENCED.
2. CONDITION AT W40 SHOWN (11 BOLTS EACH ROW). CONDITION AT W33 SHOWN (9 BOLTS EACH ROW).

TRANSFER GIRDER SPLICE

1" = 1'-0" 4

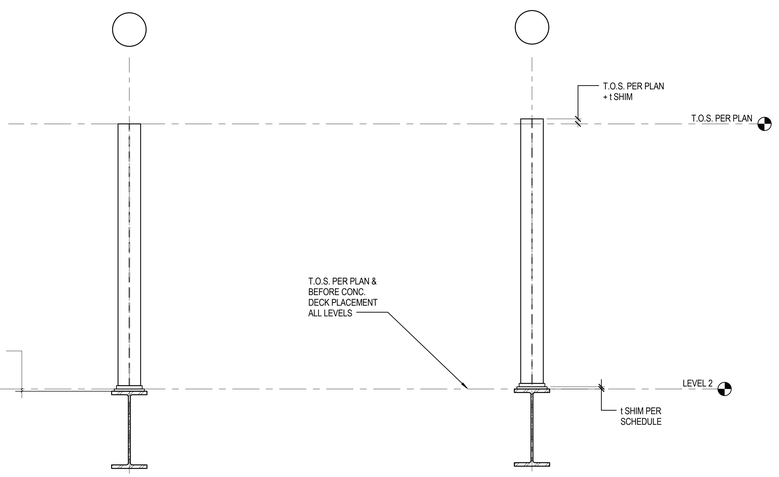

COND. AFTER PLACING CONCRETE FILL ON DECK ALL LEVELS

NOTE: TOP OF COLUMN WILL "DROP" TO CORRECT ELEVATION DUE TO DEFLECTION IN SECOND FLOOR GIRDER

COND. PRIOR TO PLACING CONCRETE FILL ON DECK ANY LEVEL

NOTE: TOP OF COLUMN WILL BE "HIGH" RELATIVE TO FINISHED CONDITION. THICKNESS OF SHIM IS EQUAL TO ANTICIPTED DEFLECTION BUT MUST BE ADJUSTED TO REFLECT AS BUILT ELEVATION OF GIRDER PRIOR TO COLUMN ERECTION.

CHANGE IN COLUMN ELEVATION @ TRANSFER GIRDER DUE TO TRANSFER GIRDER DEFLECTION

1/2" = 1'-0" 14

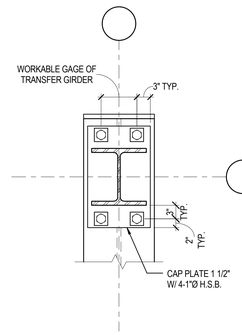

PLAN C-C

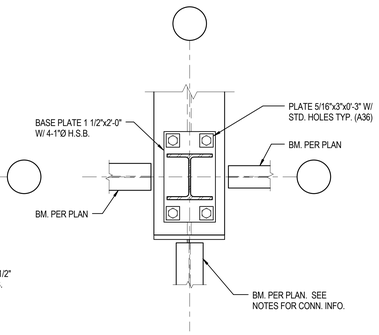

PLAN B-B

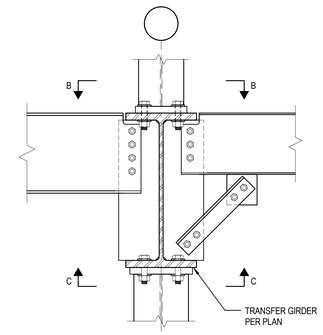

SECTION A-A

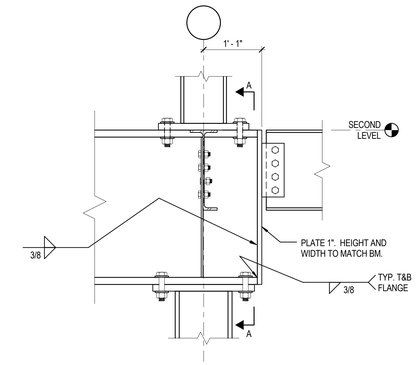

NOTES:
1. SEE DETAIL 2 FOR INFO NOT NOTED.
2. SEE DETAILS 1 & 2-S5.01 FOR BM. CONN. INFO NOT NOTED AT TRANSFER GIRDER END PLATE.
3. SEE DETAIL 7-S5.01 FOR SKEWED BM. CONN. AT GRID C, 10-10 INTERSECTION.
4. SEE 3-S5.05 FOR COL. TO BASE PLATE AND COL. TO CAP PLATE WELD INFO NOT SHOWN OR NOTED.

1" = 1'-0" 3

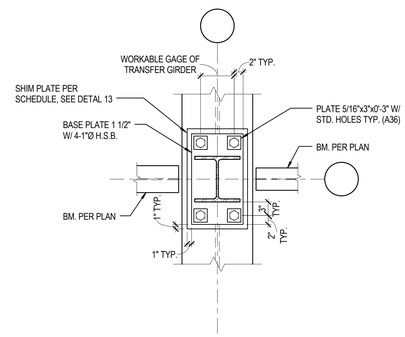

PLAN

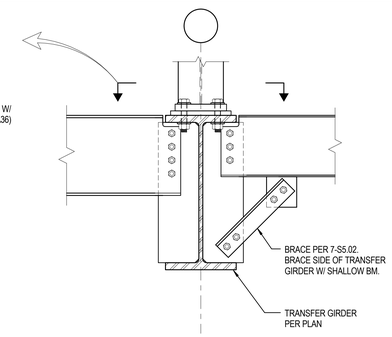

SECTION A-A

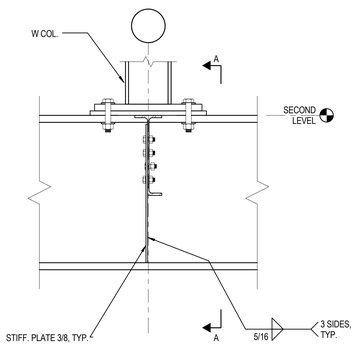

W COL. BASE CONN. AT SECOND LEVEL TRANSFER GIRDER

1" = 1'-0" 2

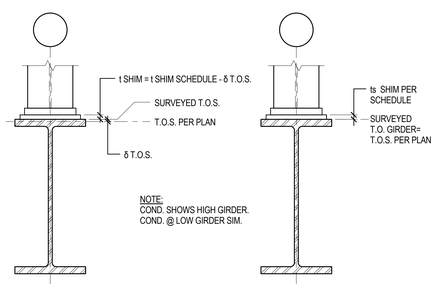

NOTE:
COND. SHOWS HIGH GIRDER.
COND. @ LOW GIRDER SIM.

COND. @ SURVEYED T.O. GIRDER ≠ T.O.S. PER PLAN

COND. @ SURVEYED T.O. GIRDER = T.O.S. PER PLAN

1" = 1'-0" 17

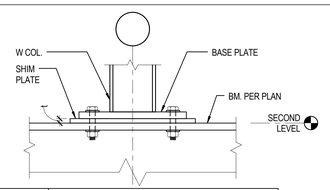

SHIM PLATE THICKNESS, 't'	SHIM PLATE LOCATION
1/4"	C-6
3/8"	B-2, B-3, B-5, B-6, C-2, C-3, C-5, C.10-2, C.10-5, C.10-6
1/2"	C.10-3
3/4"	B-8, C-8, C.10-8
7/8"	B-9, C-9
1"	C.10-9

NOTES:
1. SURVEY ELEVATION OF TOP OF GIRDER PRIOR TO ERECTING COLUMN. ADJUST SHIM THICKNESS AS REQUIRED TO ACCOUNT FOR HIGH OR LOW ELEVATION. SEE DETAIL 17. REPORT SURVEY RESULT & REVISED SHIM THICKNESS TO UNIVERSITY PRIOR TO ERECTING COLUMN.
2. SEE DETAIL 14 FOR DESCRIPTION OF CHANGE IN COLUMN ELEVATION DUE TO PLACEMENT OF CONCRETE FILL ON DECK.

SHIM PLATE @ COL SUPPORTED BY TRANSFER GIRDER SCHEDULE

1" = 1'-0" 13

CONCRETE FILL ON STEEL DECK SEQUENCE NOTES

A. AREAS INDICATED THUS ON PLAN REQUIRE SEQUENCED PLACEMENT OF CONCRETE FILL ON STEEL DECK. THIS SEQUENCING INTENDS TO MINIMIZE POST-COMPOSITE DEFLECTION AT THE TRANSFER GIRDERS. SEE PLAN SHEETS FOR EXTENT OF FILL AREAS.
B. CONCRETE FILL PLACEMENT MUST FOLLOW THE BELOW NOTED SEQUENCING ORDER .
C. CONCRETE FILL MAY NOT BE PLACED BEFORE PLACEMENT OF THE CONCRETE FILL OF THE FLOOR ABOVE.
D. COLUMNS SUPPORTED BY TRANSFER GIRDERS ARE SHIMMED HIGH IN ANTICIPATION OF TRANSFER GIRDER WET DEAD LOAD DEFLECTION DEFLECTION. SEE DETAIL 13 FOR SHIM PLATE INFO. SEE NOTE E.
E. CONTRACTOR TO SURVEY THE TOP OF TRANSFER GIRDERS ELEVATIONS PRIOR TO SHIMMING THE COLUMNS. ADJUST THICKNESS SHIM TO ACCOUNT FOR DIFFERENCE IN VERIFIED TOP OF GIRDER FROM T.O.S. PER PLAN.
F. FOR DETAILING PURPOSES AT COLUMNS SUPPORTED BY TRANSFER GIRDERS, ASSUME NO SHIM PLATES UNDER COLUMNS AND NO TRANSFER GIRDER DEFLECTION.
G. ANTICIPATED WET DEAD LOAD DEFLECTION AFTER EACH LEVEL'S PLACEMENT IS APPROXIMATELY 1/3 OF SHIM PLATE THICKNESS.
H. SEQUENCE CONCRETE PLACEMENT ON STEEL DECK AS FOLLOWS:
1. PLACE CONCRETE FILL @ ROOF LEVEL.
2. PLACE CONCRETE FILL @ THIRD FLOOR.
3. PLACE CONCRETE FILL @ SECOND FLOOR.

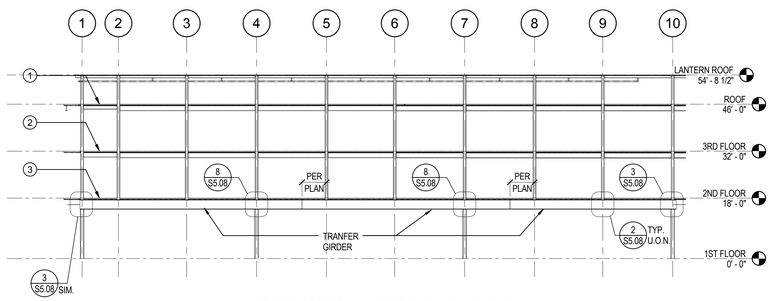

ELEVATION LINES B, C, C.10

1/16" = 1'-0"

CONCRETE FILL ON STEEL DECK SEQUENCING AT FLOOR AREAS SUPPORTED BY TRANSFER GIRDERS

1/8" = 1'-0" 1

Solomon Cordwell Buenz
www.scb.com
Chicago 312.896.1100
San Francisco 415.216.2450
Architecture Planning Interior Design

RUTHERFORD + CHEKENE
Structural | Geotechnical Engineers
55 Second Street Suite 600
San Francisco CA 94105
T 415 568 4400
F 415 618 0684
www.ruthchek.com

UNIVERSITY OF CALIFORNIA MERCED FIRE MARSHAL
Approval of this plan does not authorize or approve any omission or deviation from applicable regulations. Final approval is subject to field inspection One set of approved plans shall be available on the Project site at all times.
Reviewed by: _____
Date: _____
UCM Project #: 300290

NO.	DATE	DESCRIPTION	NO.	DATE	DESCRIPTION
2	02.27.2014	ADDENDUM #2			
	12.20.2013	100% CONSTRUCTION DOCUMENTS			
	10.21.2013	90% CONSTRUCTION DOCUMENTS			
	07.26.2013	50% CONSTRUCTION DOCUMENTS			
	04.15.2013	100% DESIGN DEVELOPMENT			
	01.28.2013	100% SCHEMATIC DESIGN			

UCMERCED

REGISTERED PROFESSIONAL ENGINEER 4088 Exp. 06.06.13 STRUCTURAL STATE OF CALIFORNIA

© 2012 Solomon Cordwell Buenz

TRANSFER GIRDER DETAILS

Scale: As indicated
Drawn By: Author
Project Number:

Sheet Number: **S5.08**

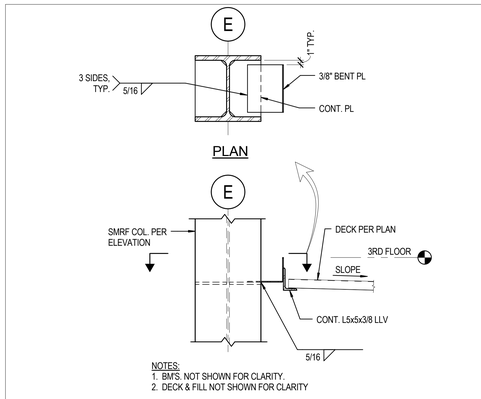

NOTES:
1. BM'S. NOT SHOWN FOR CLARITY.
2. DECK & FILL NOT SHOWN FOR CLARITY

LEDGER @ SMRF COL'S. ALONG LINE E

1" = 1'-0" **20**

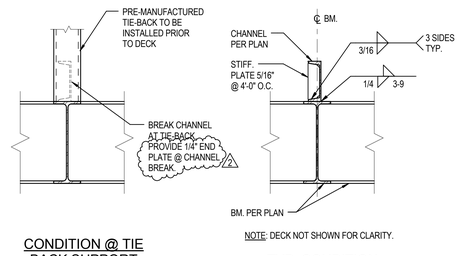

NOTE: SEE 17-S5.32 FOR INFO NOT NOTED.

1 1/2" = 1'-0" **16**

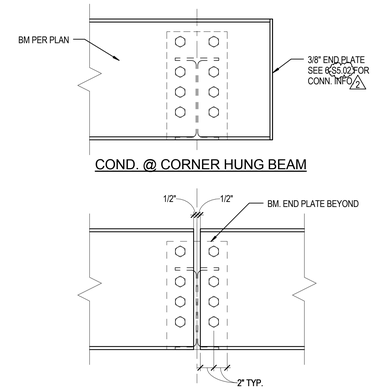

1 1/2" = 1'-0" **12**

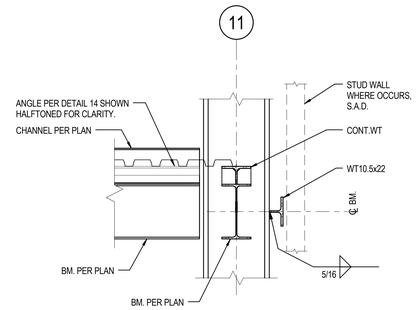

NOTES:
1. SEE 3-S5.04 FOR DECK SUPPORT @ PERIMETER COL. INFO.
2. SEE DETAIL 7 FOR INFO. NOT NOTED.

1" = 1'-0" **8**

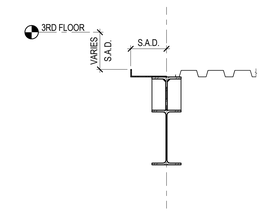

1" = 1'-0" **4**

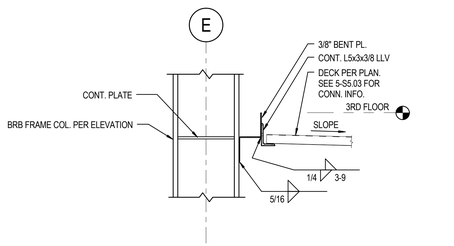

NOTES:
1. BM'S. NOT SHOWN FOR CLARITY.
2. DECK & FILL NOT SHOWN FOR CLARITY.

LEDGER @ BRBF COL. LINES 4, 7 & 10

1" = 1'-0" **19**

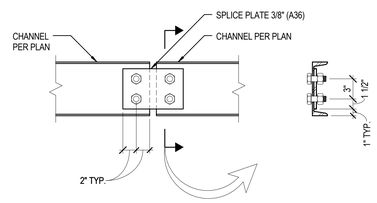

1 1/2" = 1'-0" **15**

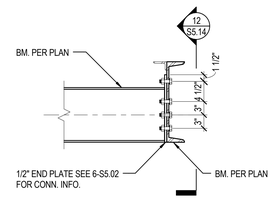

NOTES:
1. SEE DETAIL 10 FOR INFO. NOT NOTED.
2. SHOWN ON PLAN AS:

TYPICAL BROKEN HUNG BEAM CONN.

1" = 1'-0" **11**

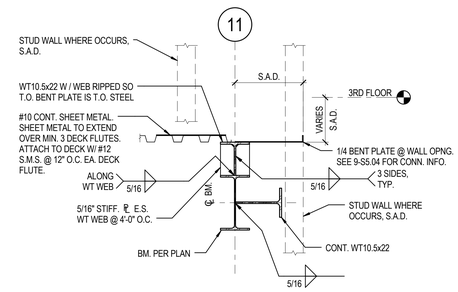

1" = 1'-0" **7**

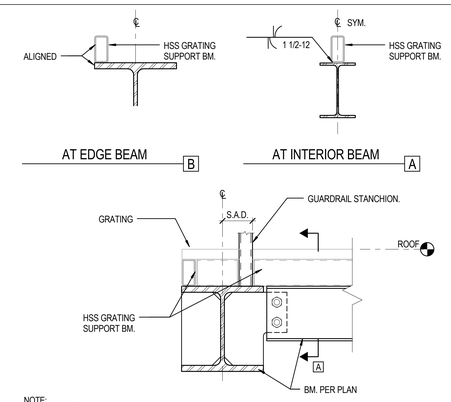

NOTE:
SEE DETAIL 2 FOR INFO NOT NOTED.

1 1/2" = 1'-0" **3**

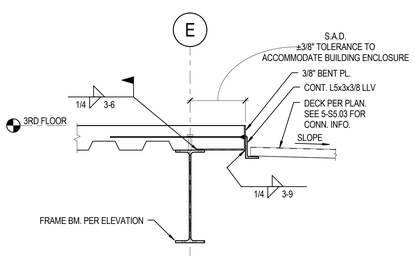

NOTES:
1. SEE DETAILS 19 & 20 FOR CONDITION @ FRAME COL'S.
2. SEE NOTE 3 ON DETAIL 9-S5.04.

LEDGER @ FRAME BMS. ALONG LINE E

1" = 1'-0" **18**

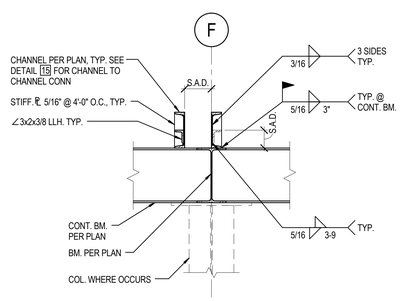

NOTES:
1. DECK NOT SHOWN FOR CLARITY.
2. SEE DETAIL 6 FOR COL.-TO-BM. CONN. INFO.
3. SEE DETAIL 16 FOR CHANNEL TO W BM. CONN. INFO NOT NOTED.

1" = 1'-0" **14**

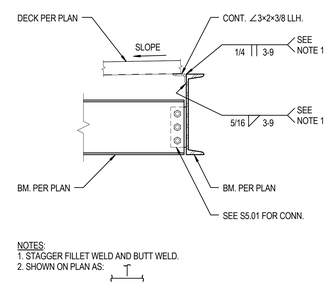

NOTES:
1. STAGGER FILLET WELD AND BUTT WELD.
2. SHOWN ON PLAN AS:

TYPICAL CONTINUOUS HUNG BEAM CONN.

1" = 1'-0" **10**

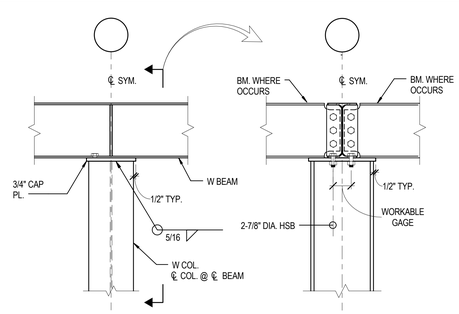

1" = 1'-0" **6**

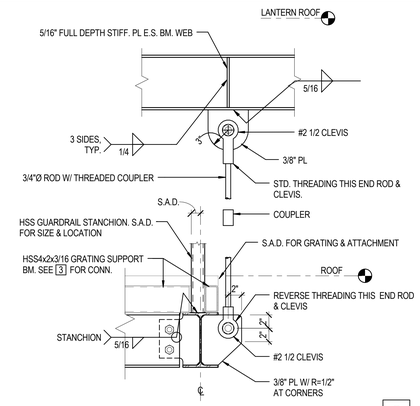

1 1/2" = 1'-0" **2**

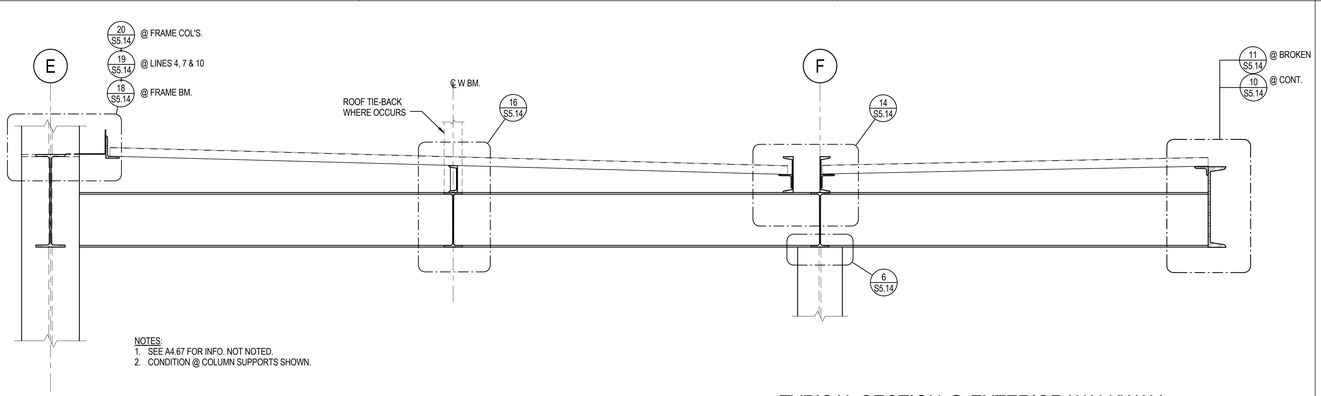

NOTES:
1. SEE A4.67 FOR INFO. NOT NOTED.
2. CONDITION @ COLUMN SUPPORTS SHOWN.

TYPICAL SECTION @ EXTERIOR WALKWAY

1" = 1'-0" **9**

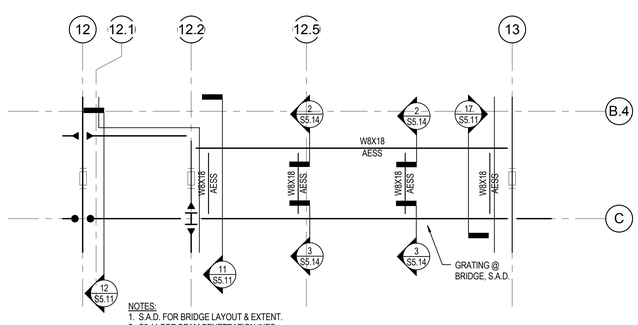

NOTES:
1. S.A.D. FOR BRIDGE LAYOUT & EXTENT.
2. S5.11 FOR BEAM PENETRATION INFO.

BRIDGE PARTIAL PLAN - ROOF

1/4" = 1'-0" **1**

Solomon Cordwell Buenz
www.scb.com
Chicago 312.896.1100
San Francisco 415.216.2450
Architecture Planning Interior Design

RUTHERFORD + CHEKENE
Structural | Geotechnical Engineers
55 Second Street Suite 600
San Francisco CA 94105
T 415 568 4400
F 415 618 0684
www.ruthchek.com

UNIVERSITY OF CALIFORNIA
MERCED
FIRE MARSHAL
Approval of this plan does not authorize or approve any omission or deviation from applicable regulations. Final approval is subject to field inspection One set of approved plans shall be available on the Project site at all times.
Reviewed by: _____
Date: _____
UCM Project #: 300290

NO.	DATE	DESCRIPTION	NO.	DATE	DESCRIPTION
2	02.27.2014	ADDENDUM #2			
	12.20.2013	100% CONSTRUCTION DOCUMENTS			
	10.21.2013	90% CONSTRUCTION DOCUMENTS			
	07.26.2013	50% CONSTRUCTION DOCUMENTS			
	04.15.2013	100% DESIGN DEVELOPMENT			
	01.28.2013	100% SCHEMATIC DESIGN			

UCMERCED

© 2012 Solomon Cordwell Buenz

REGISTERED PROFESSIONAL ENGINEER
STEVEN A. HUNG
No. 3030-S5
STRUCTURAL
STATE OF CALIFORNIA

STEEL DETAILS

Scale: As indicated
Drawn By: Author
Project Number:
Sheet Number: **S5.14**

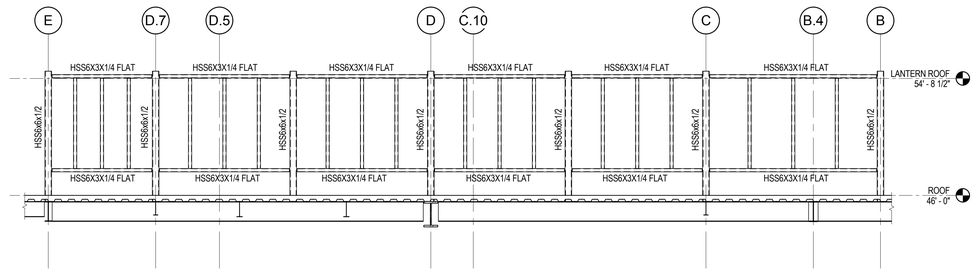

NOTE: SEE DETAIL 3 FOR INFO NOT NOTED.

SCREEN ELEVATION LINE 16

1/4" = 1'-0" 4

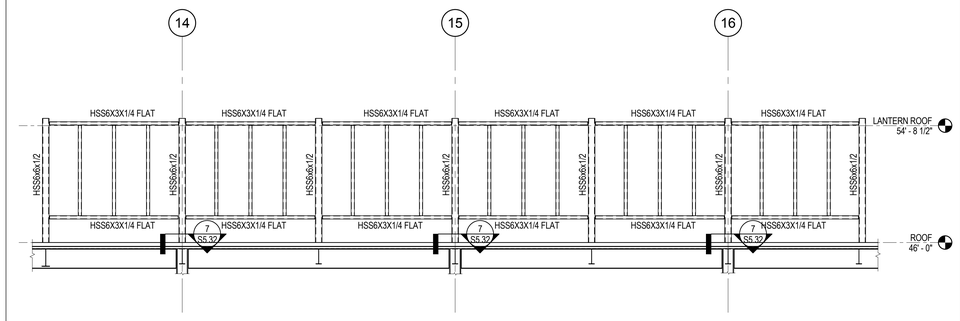

NOTE: SEE DETAIL 2 FOR INFO NOT NOTED.

SCREEN ELEVATION LINE E

1/4" = 1'-0" 3

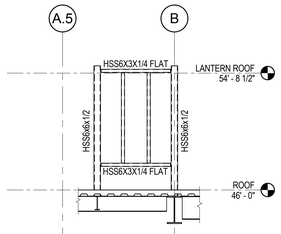

NOTE: SEE DETAIL 6 FOR INO NOT NOTED.

SCREEN ELEVATION LINE 13.5

1/4" = 1'-0" 14

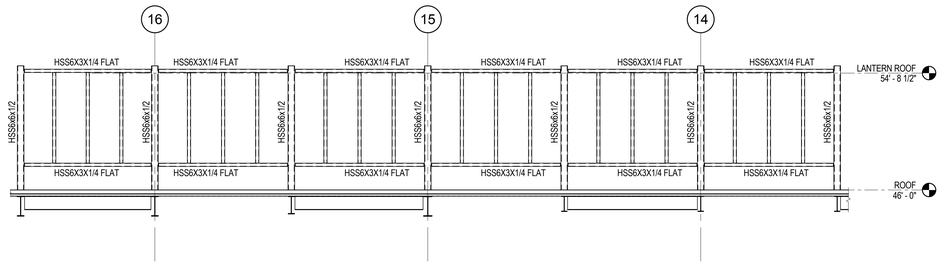

NOTE: SEE DETAIL 4 FOR INFO NOT NOTED.

SCREEN ELEVATION LINE B

1/4" = 1'-0" 6

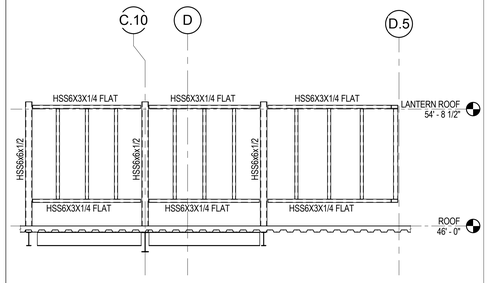

NOTE: SEE DETAIL 1 FOR INFO NOT NOTED.

SCREEN ELEVATION LINE 2

1/4" = 1'-0" 2

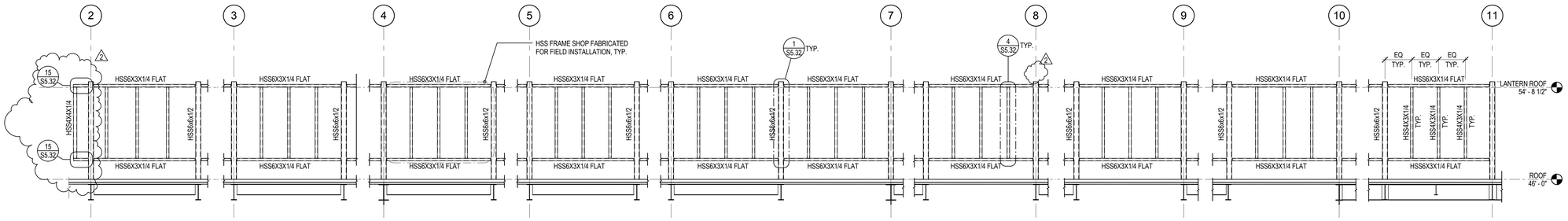

NOTES:
1. ALL STEEL HOT-DIPPED GALVANIZED U.O.N.
2. SEE S5.32 FOR MECHANICAL SCREEN FRAMING CONNECTION DETAILS.
3. MECHANICAL SCREEN POSTS ABOVE W COLUMNS SHOWN IN NON-FRAME STEEL COLUMN SCHEDULE AND IN ELEVATIONS THIS SHEET. MECHANICAL SCREEN POSTS ABOVE W BEAMS SHOWN ELEVATIONS THIS SHEET ONLY.

SCREEN ELEVATION NORTH OF LINE D.7

1/4" = 1'-0" 1

NOTE: ALL SCREEN STEEL FRAMING ON THIS SHEET IS HOT-DIPPED GALVANIZED, U.O.N.

Solomon Cordwell Buenz
www.scb.com
Chicago 312.896.1100
San Francisco 415.216.2450
Architecture Planning Interior Design

RUTHERFORD + CHEKENE
Structural | Geotechnical Engineers
55 Second Street Suite 600
San Francisco CA 94105
T 415 568 4400
F 415 618 0684
www.ruthchek.com

UNIVERSITY OF CALIFORNIA
MERCED
FIRE MARSHAL
Approval of this plan does not authorize or approve any omission or deviation from applicable regulations. Final approval is subject to field inspection One set of approved plans shall be available on the Project site at all times.
Reviewed By: ____
Date: ____
UCM Project # : 300250

NO.	DATE	DESCRIPTION	NO.	DATE	DESCRIPTION
2	02.27.2014	ADDENDUM #2			
	12.20.2013	100% CONSTRUCTION DOCUMENTS			
	10.21.2013	90% CONSTRUCTION DOCUMENTS			
	07.26.2013	50% CONSTRUCTION DOCUMENTS			
	04.15.2013	100% DESIGN DEVELOPMENT			
	01.28.2013	100% SCHEMATIC DESIGN			

UCMERCED

© 2012 Solomon Cordwell Buenz

MECHANICAL SCREEN ELEVATIONS

Scale: 1/4" = 1'-0"
Drawn By: Author
Project Number:
Sheet Number: S5.31

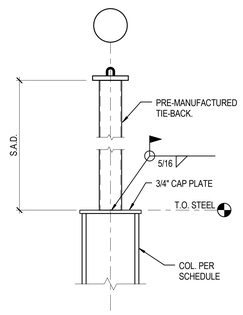

NOTE: SEE 20-S5.06 FOR CAP PLATE TO TOP OF COLUMN CONN. INFO NOT NOTED.

1" = 1'-0" 19

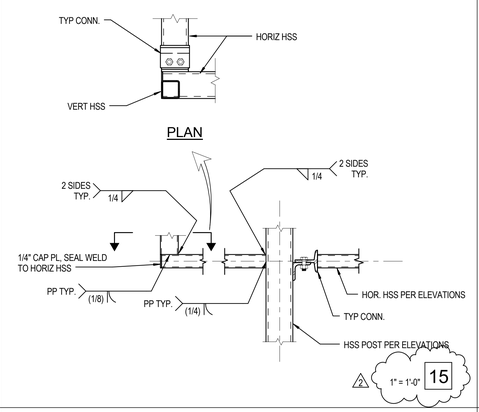

1" = 1'-0" 15

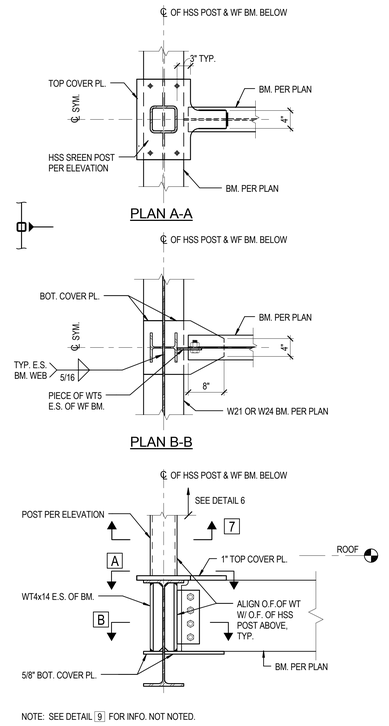

NOTE: SEE DETAIL 9 FOR INFO. NOT NOTED.

SCREEN POST @ W21 & W24

1" = 1'-0" 11

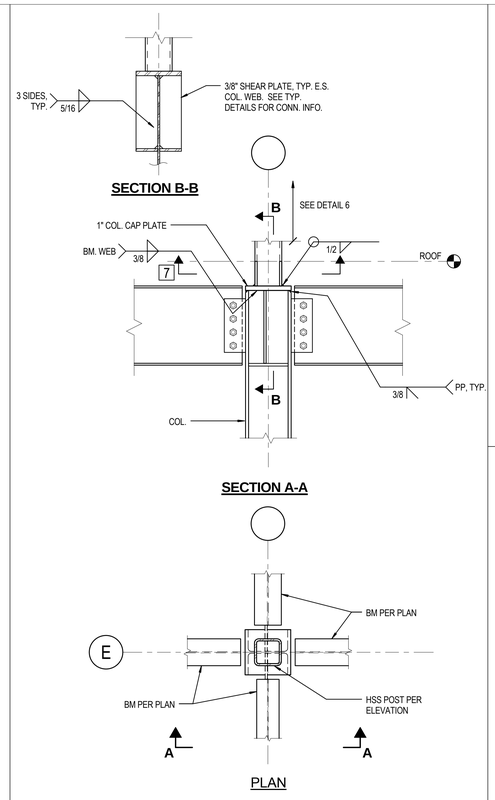

SCREEN POST @ W COLUMN

1" = 1'-0" 7

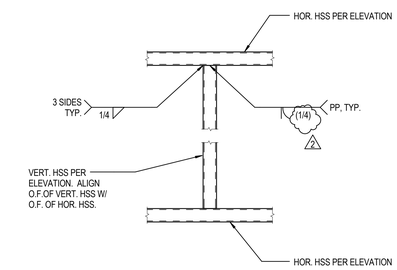

1" = 1'-0" 4

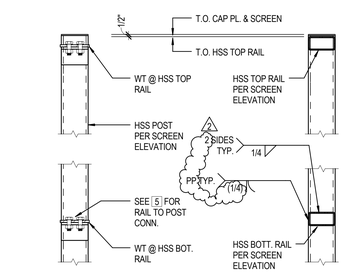

NOTE: HSS T&B RAIL NOT SHOWN FOR CLARITY IN TYPICAL CONDITION.

TYPICAL CONDITION SIM. CONDITON

1" = 1'-0" 3

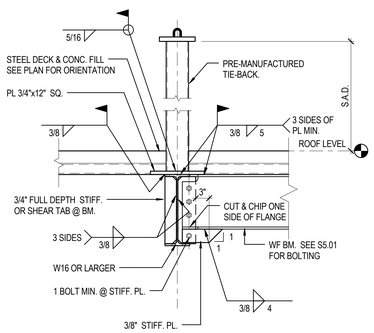

ORTHORGONAL BEAMS OF THE DIFFERENT DEPTH

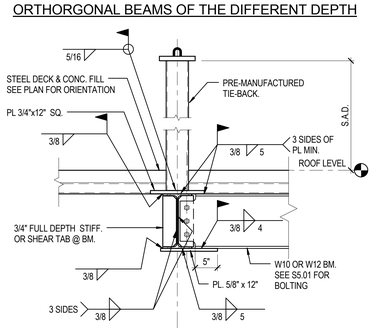

ORTHORGONAL BEAMS OF THE SAME DEPTH

TYP. TIE BACK SUPPORT @ ROOF

1" = 1'-0" 17

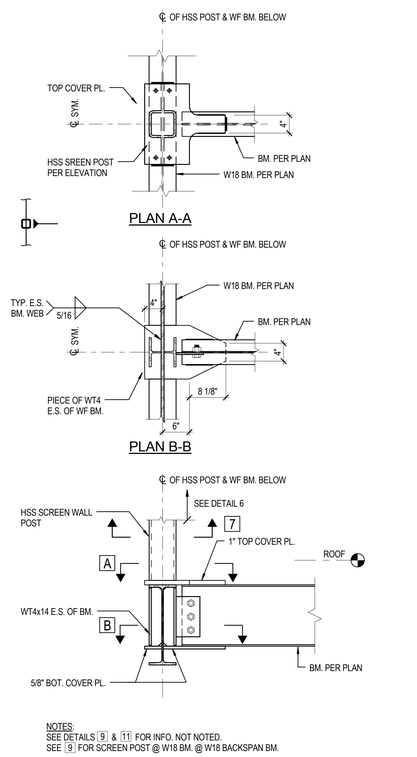

NOTES:
SEE DETAILS 9 & 11 FOR INFO. NOT NOTED.
SEE 9 FOR SCREEN POST @ W18 BM. @ W18 BACKSPAN BM.

SCREEN POST @ W18

1" = 1'-0" 13

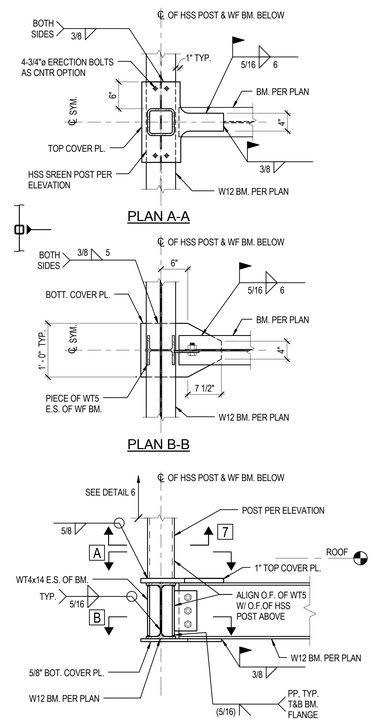

SCREEN POST @ W12

1" = 1'-0" 9

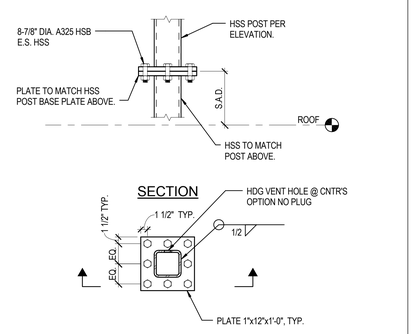

TYPICAL WINDSCREEN POST BASE CONNECTION

1" = 1'-0" 6

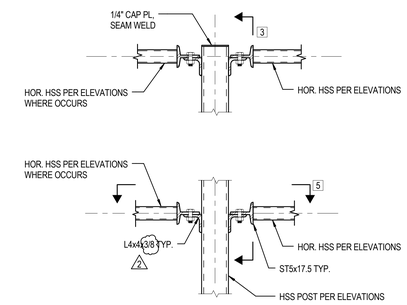

1" = 1'-0" 2

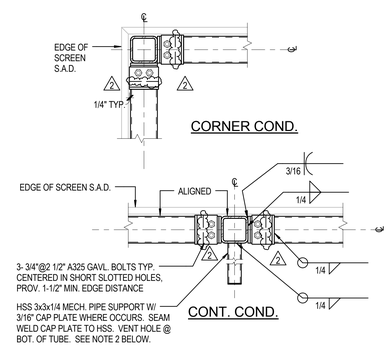

NOTES:
1. SEE DETAIL 2 FOR INFORMATION NOT NOTED.
2. SEE MECHANICAL DRAWINGS FOR LOCATION AND LENGTHS OF HOR. HSS PIPE SUPPORTS.

1" = 1'-0" 5

SHEET NOTES:
1. ALL MECHANICAL SCREEN FRAMING MEMBERS TO BE HOT-DIP GALVANIZED.
2. LOCATE GALVANIZING VENT HOLES ON BOTTOM SIDE OF HORIZONTAL MEMBERS.
3. FILL VENT HOLES IN VERT MEMBERS AFTER GALVANIZING.
4. ALL WELDS TO BE CONTINUOUS AROUND RADII OF TUBES, U.O.N.

SCREEN FRAMING SHEET NOTES

1

Solomon Cordwell Buenz
www.scb.com
Chicago 312.896.1100
San Francisco 415.216.2450
Architecture Planning Interior Design

RUTHERFORD + CHEKENE
Structural | Geotechnical Engineers
55 Second Street Suite 600
San Francisco CA 94105
T 415 568 4400
F 415 618 0684
www.ruthchek.com

UNIVERSITY OF CALIFORNIA
MERCED
FIRE MARSHAL
Approval of this plan does not authorize or approve any omission or deviation from applicable regulations. Final approval is subject to field inspection. One set of approved plans shall be available on the Project site at all times.
Received By: _____
Date: _____
UCM Project #: 300290

NO.	DATE	DESCRIPTION	NO.	DATE	DESCRIPTION
2	02.27.2014	ADDENDUM #2			
	12.20.2013	100% CONSTRUCTION DOCUMENTS			
	10.21.2013	90% CONSTRUCTION DOCUMENTS			
	07.26.2013	50% CONSTRUCTION DOCUMENTS			
	04.15.2013	100% DESIGN DEVELOPMENT			
	01.28.2013	100% SCHEMATIC DESIGN			

UCMERCED

© 2012 Solomon Cordwell Buenz

PROFESSIONAL ENGINEER
STEVEN C. CHEKENE
#2268
Exp. 09.30.14
STATE OF CALIFORNIA

MECHANICAL SCREEN DETAILS

Scale: 1" = 1'-0"
Drawn By: Author
Project Number:

Sheet Number: S5.32

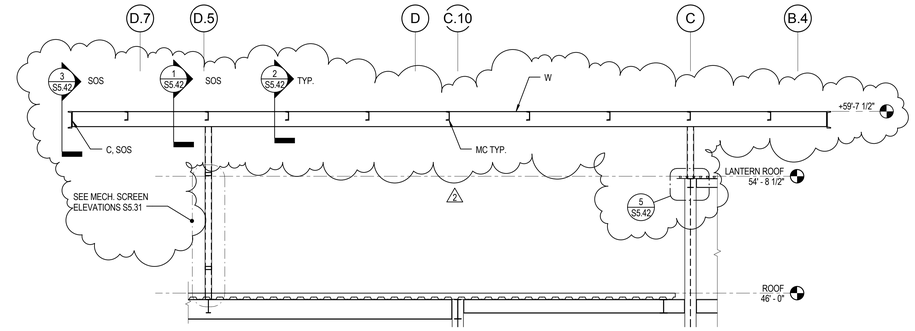

ADD ALT. #3:
ADD HSS POSTS TO LANTERN ROOF COLS LINE C, EXTEND HSS POSTS LINE D.5, LINES 2 THROUGH 11, ADD HORIZONTAL PV SUPPORT FRAMING.

TYPICAL PV FRAME SECTION 3
1/4" = 1'-0"

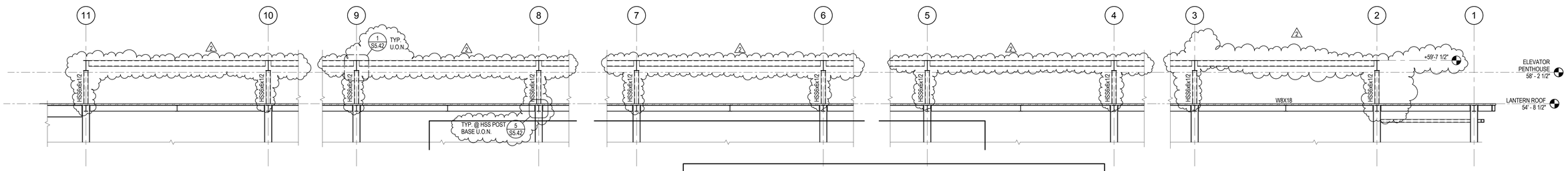

ADD ALT. #3:
ADD HHS POSTS TO LANTERN ROOF COLS LINE C, LINES 2 THROUGH 11, ADD HORIZONTAL PV SUPPORT FRAMING

PV SUPPORT FRAMING ELEVATION @ LINE C 2
1/4" = 1'-0"

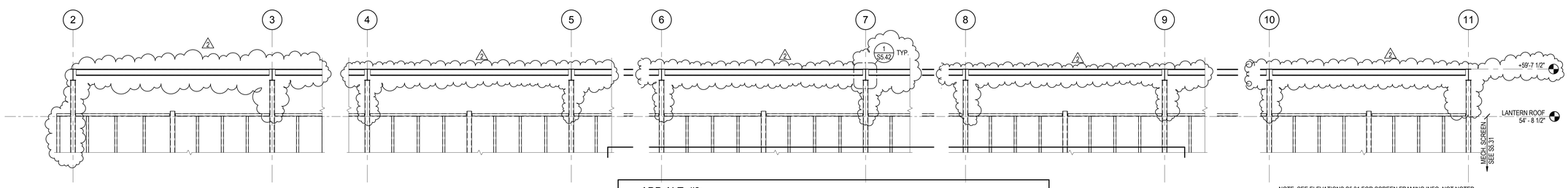

NOTE: SEE ELEVATIONS S5.31 FOR SCREEN FRAMING INFO. NOT NOTED.

ADD ALT. #3:
EXTEND MECHANICAL SCREEN POST HEIGHT ALONG LINE D.5, LINES 2 THROUGH 11, ADD HORIZONTAL PV SUPPORT FRAMING.

PV SUPPORT FRAMING ELEVATION @ LINE D.5 1
1/4" = 1'-0"

Solomon Cordwell Buenz
www.scb.com
Chicago 312.896.1100
San Francisco 415.216.2450
Architecture Planning Interior Design

RUTHERFORD + CHEKENE
Structural | Geotechnical Engineers
55 Second Street Suite 600
San Francisco CA 94105
T 415 568 4400
F 415 618 0684
www.ruthchek.com

UNIVERSITY OF CALIFORNIA
MERCED
FIRE MARSHAL
Approval of this plan does not authorize or approve violations of building code or other ordinances or regulations. Final approval is subject to field inspection. One set of approved plans shall be available on the Project site at all times.
Reviewed by: _____
Date: _____
UCM Project #: 300290

NO.	DATE	DESCRIPTION	NO.	DATE	DESCRIPTION
2	02.27.2014	ADDENDUM #2			
	12.20.2013	100% CONSTRUCTION DOCUMENTS			
	10.21.2013	90% CONSTRUCTION DOCUMENTS			
	07.26.2013	50% CONSTRUCTION DOCUMENTS			
	04.15.2013	100% DESIGN DEVELOPMENT			
	01.28.2013	100% SCHEMATIC DESIGN			

UCMERCED

© 2012 Solomon Cordwell Buenz

REGISTERED PROFESSIONAL ENGINEER
STEVEN C. BUENZ
No. 3 Exp. 06-30-14
STATE OF CALIFORNIA

PV SUPPORT FRAMING ELEVATIONS

Scale: 1/4" = 1'-0"
Drawn By: Author
Project Number:
Sheet Number: 2 S5.41

ADD ALT. #3:
ALL WORK THIS SHEET INCLUDED IN ADD ALT. # 3 SCOPE OF WORK.

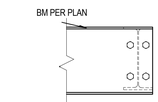

COND. @ END, HUNG BEAM

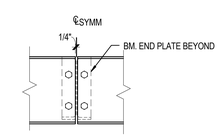

COND. @ BROKEN HUNG BEAM

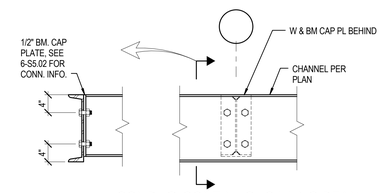

COND. @ CONTINUOUS HUNG BEAM

NOTES:
ALL BOLTS 7/8 DIA. H.S.B.

1" = 1'-0" 3

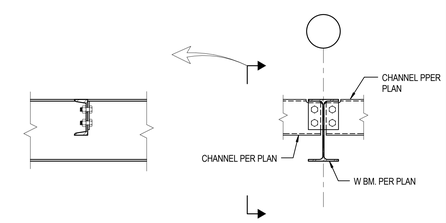

NOTE: SEE 4-S5.01 FOR CONN. INFO NOT NOTED.

TYP. CHANNEL TO GIRDER CONNECTION

1" = 1'-0" 2

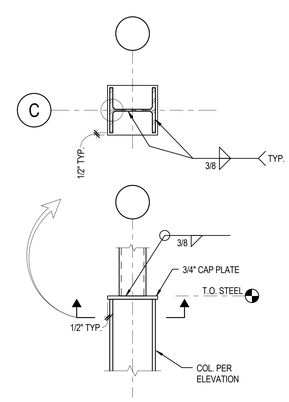

NOTE:
SEE 20-S5.06 FOR INFO NOT NOTED.

1" = 1'-0" 5

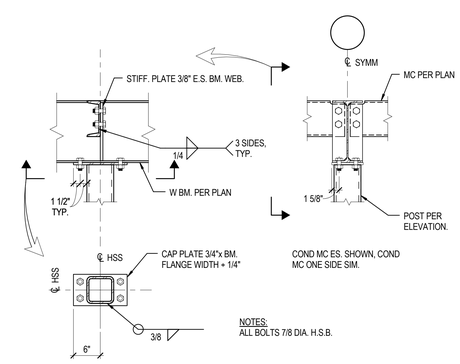

NOTES:
ALL BOLTS 7/8 DIA. H.S.B.

TYP. PV SUPPORT POST @ GIRDER

1" = 1'-0" 1

Solomon Cordwell Buenz
www.scb.com
Chicago 312.896.1100
San Francisco 415.216.2450
Architecture Planning Interior Design

RUTHERFORD + CHEKENE
Structural | Geotechnical Engineers
55 Second Street Suite 600
San Francisco CA 94105
T 415 568 4400
F 415 618 0684
www.ruthchek.com

UNIVERSITY OF CALIFORNIA
MERCED
FIRE MARSHAL
Approval of this plan does not authorize or approve any omission or deviation from applicable regulations. Final approval is subject to field inspection. One set of approved plans shall be available on the Project site at all times.
Reviewed by: _____
Date: _____
UCM Project # : 305230

NO.	DATE	DESCRIPTION	NO.	DATE	DESCRIPTION
2	02.27.2014	ADDENDUM #2			
	12.20.2013	100% CONSTRUCTION DOCUMENTS			
	10.21.2013	90% CONSTRUCTION DOCUMENTS			
	07.26.2013	50% CONSTRUCTION DOCUMENTS			
	04.15.2013	100% DESIGN DEVELOPMENT			
	01.28.2013	100% SCHEMATIC DESIGN			

UCMERCED

© 2012 Solomon Cordwell Buenz

REGISTERED PROFESSIONAL ENGINEER
STEVEN M. HOPE
No. 28,353
STATE OF CALIFORNIA

PV SUPPORT FRAMING DETAILS

Scale: 1" = 1'-0"
Drawn By: Author
Project Number:

Sheet Number: S5.42

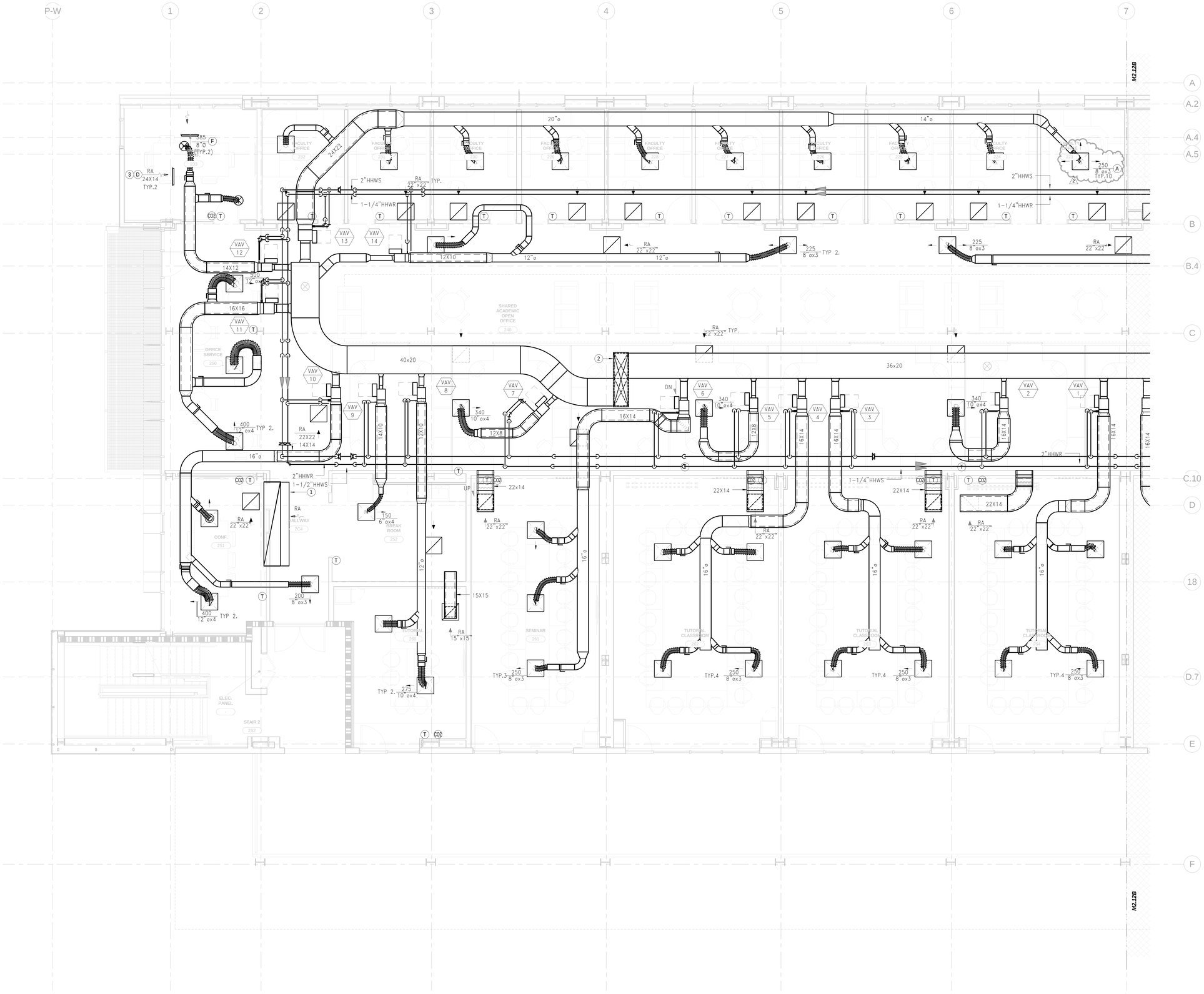

KEY NOTES:

1. 120X36 TRANSITION TO CONNECT TO ARCHITECTURAL ACOUSTIC-LINED RA SHAFT UP. SERVES CEILING PLENUM RETURN WESTSIDE.
2. 76X20 SA UP.
3. SEE 11/A7.56 FOR LOCATION OF SIDEWALL RA GRILLE AT SOFFIT.

Solomon Cordwell Buenz
www.scb.com
Chicago 312.896.1100
San Francisco 415.216.2450
Architecture Planning Interior Design

GAYNER ENGINEERS
1133 POST STREET
SAN FRANCISCO, CA 94109
TELEPHONE (415) 474-9500
FAX (415) 474-1363

UNIVERSITY OF CALIFORNIA
OFFICE OF THE PRESIDENT
OPB MATERIAL
Approval of this plan does not authorize or approve any omission or deviation from applicable regulations. Final approval is subject to field inspection One set of approved plans shall be available on the Project site at all times.
Reviewed by: _____
Date: _____
UCM Project # 306290

NO.	DATE	DESCRIPTION	NO.	DATE	DESCRIPTION
2	02.27.2014	ADDENDUM NO. 2			
	12.20.2013	100% CONSTRUCTION DOCUMENTS			
	10.21.2013	90% CONSTRUCTION DOCUMENTS			
	07.26.2013	50% CONSTRUCTION DOCUMENTS			
	02.27.2013	100% DESIGN DEVELOPMENT			
	01.28.2013	100% SCHEMATIC DESIGN			

CLASSROOM AND ACADEMIC OFFICE BUILDING
UCMERCED

© 2012 Solomon Cordwell Buenz

REGISTERED PROFESSIONAL ENGINEER NICHOLAS MITROPOULOS No. 19,414 Exp. 09-30-15 OF CALIFORNIA

ENLARGED SECOND FLOOR PLAN

Scale: 1/4" = 1'-0"
Drawn By: NM
Project Number: 2012040
Sheet Number: M2.12A

2/25/2014 6:54:59 PM

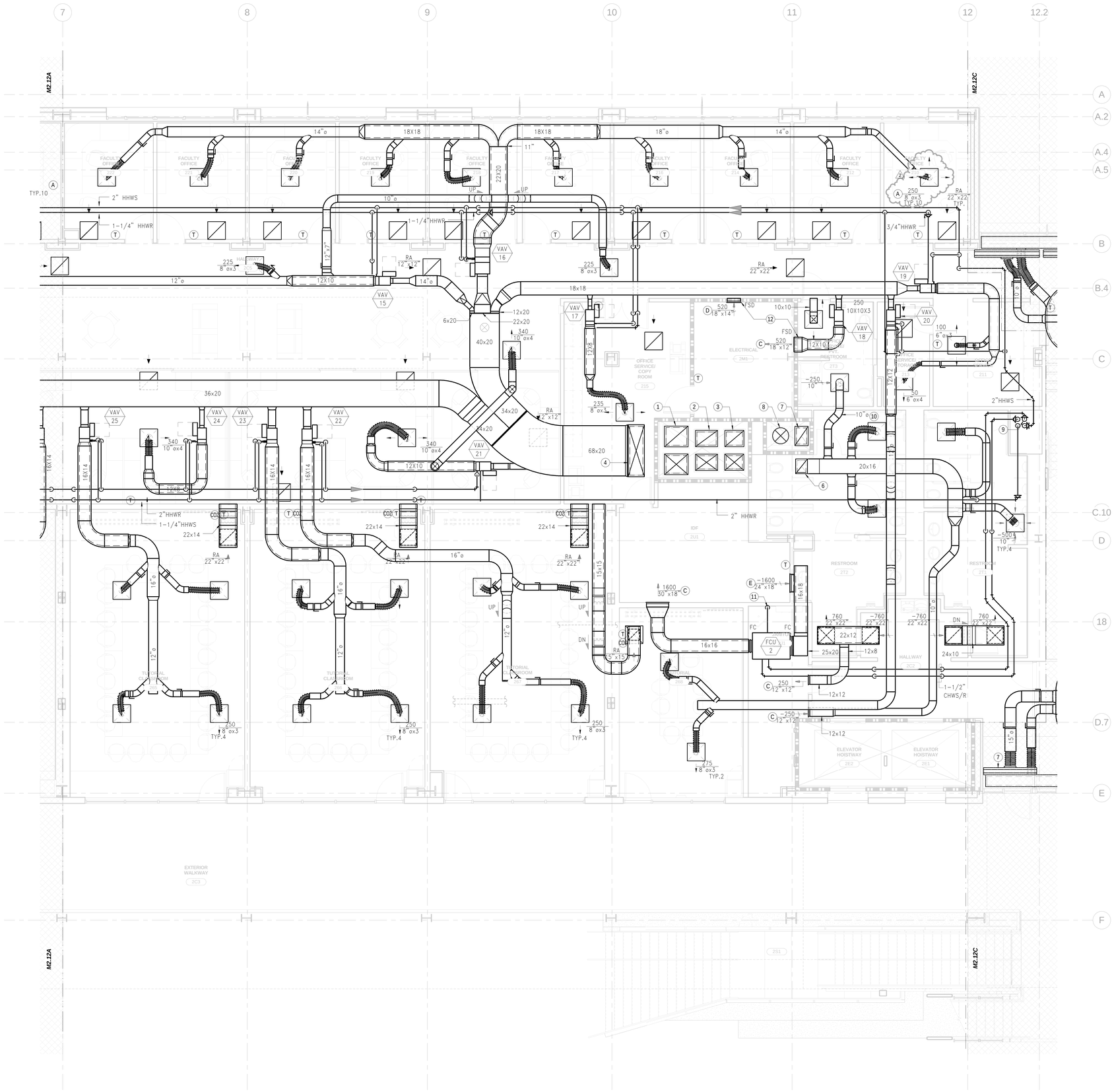

KEY NOTES:

1. 30X26 SA & EA RISERS – 210 SEAT LECTURE HALL.
2. 28X20 SA & EA RISERS – 150 SEAT LECTURE HALL.
3. 24X20 SA & EA RISERS – 120 SEAT LECTURE HALL.
4. 68X20 SA RISER.
5. 76X20 SA UP.
6. 20X16 EA UP.
7. 24X16 EA RISER. LEVEL 1 RESTROOMS.
8. 22"ø SA RISER. LEVEL 1 RESTROOMS.
9. 4" CHWS/R, 2-1/2"HHWS/R RISERS.
10. WELDED STAINLESS STEEL DUCT.
11. 1" CONDENSATE DRAIN TO SINK.
12. FSD CONTROLLED BY AREA SMOKE DETECTION SYSTEM. SEE ELECT. DWGS.

Solomon Cordwell Buenz
www.scb.com
Chicago 312.896.1100
San Francisco 415.216.2450
Architecture Planning Interior Design

GAYNER ENGINEERS
1133 POST STREET
SAN FRANCISCO, CA 94109
TELEPHONE (415) 474-9500
FAX (415) 474-1363

UNIVERSITY OF CALIFORNIA
MERCED
FIRE MARSHAL
Approval of this plan does not authorize or approve any omission or deviation from applicable regulations. Final approval is subject to field inspection. One set of approved plans shall be available on the Project site at all times.
Reviewed by: _____
Date: _____
UCM Project # 306200

NO.	DATE	DESCRIPTION	NO.	DATE	DESCRIPTION
2	02.27.2014	ADDENDUM NO. 2			
	12.20.2013	100% CONSTRUCTION DOCUMENTS			
	10.21.2013	90% CONSTRUCTION DOCUMENTS			
	07.26.2013	50% CONSTRUCTION DOCUMENTS			
	02.27.2013	100% DESIGN DEVELOPMENT			
	01.28.2013	100% SCHEMATIC DESIGN			

CLASSROOM AND ACADEMIC OFFICE BUILDING
UCMERCED

© 2012 Solomon Cordwell Buenz

REGISTERED PROFESSIONAL ENGINEER NICHOLAS MITROW No. 19,414 Exp. 09-30-15 STATE OF CALIFORNIA

ENLARGED SECOND FLOOR PLAN

Scale: 1/4" = 1'-0"
Drawn By: NM
Project Number: 2012040
Sheet Number: M2.12B

2/25/2014 6:55:22 PM

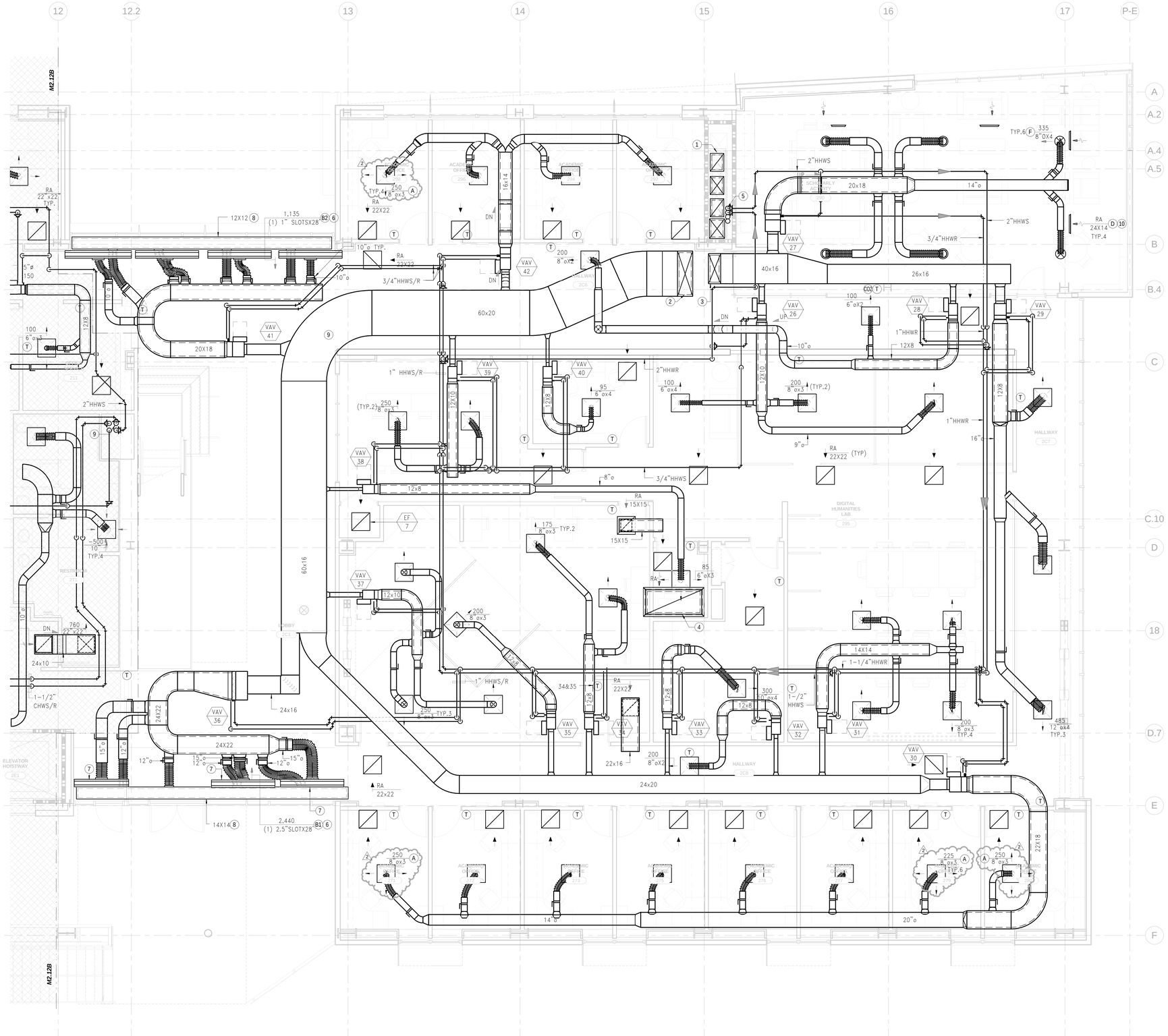

KEY NOTES:

1. 22X16 SA & EA RISERS – 90 SEAT LECTURE HALL.
2. 60X20 SA UP.
3. 40X16 SA UP.
4. 82X40 TRANSITION TO CONNECT TO ARCHITECTURAL ACOUSTIC–LINED RA SHAFT UP. SERVES CEILING PLENUM RETURN EASTSIDE.
5. 2–1/2" UP & 3" DN CHWS/R. 2" UP AND 2–1/2" DN HHWS/R RISERS.
6. CEILING SLOT DIFFUSER SERVING 2ND FLOOR.
7. FLOOR GRILLE SERVING 3RD FLOOR. SEE M2.13C FOR GRILLE SIZE AND CAPACITY.
8. PLENUM FOR CEILING SLOT DIFFUSER.
9. TRANSITION ELBOW: 60X20 TO 60X16.
10. SEE 11/A7.56 FOR LOCATION OF SIDEWALL RA GRILLE AT SOFFIT.

Solomon Cordwell Buenz
www.scb.com
Chicago 312.896.1100
San Francisco 415.216.2450
Architecture Planning Interior Design

GAYNER ENGINEERS
1133 POST STREET
SAN FRANCISCO, CA 94109
TELEPHONE (415) 474-9500
FAX (415) 474-1363

UNIVERSITY OF CALIFORNIA
MERCED
FIRE MARSHAL
Approval of this plan does not authorize or approve any omission or deviation from applicable regulations. Final approval is subject to field inspection One set of approved plans shall be available on the Project site at all times.
Reviewed by: _____
Date: _____
UCM Project # 5002290

NO.	DATE	DESCRIPTION	NO.	DATE	DESCRIPTION
2	02.27.2014	ADDENDUM NO. 2			
	12.20.2013	100% CONSTRUCTION DOCUMENTS			
	10.21.2013	90% CONSTRUCTION DOCUMENTS			
	07.26.2013	50% CONSTRUCTION DOCUMENTS			
	02.27.2013	100% DESIGN DEVELOPMENT			
	01.28.2013	100% SCHEMATIC DESIGN			

CLASSROOM AND ACADEMIC OFFICE BUILDING
UCMERCED

© 2012 Solomon Cordwell Buenz

REGISTERED PROFESSIONAL ENGINEER NIKOLAS MIROPOLSKY No. 19,414 Exp. 09–30–15 OF CALIFORNIA

ENLARGED SECOND FLOOR PLAN

Scale: 1/4" = 1'-0"
Drawn By: NM
Project Number: 2012040
Sheet Number: M2.12C

2/25/2014 6:55:50 PM

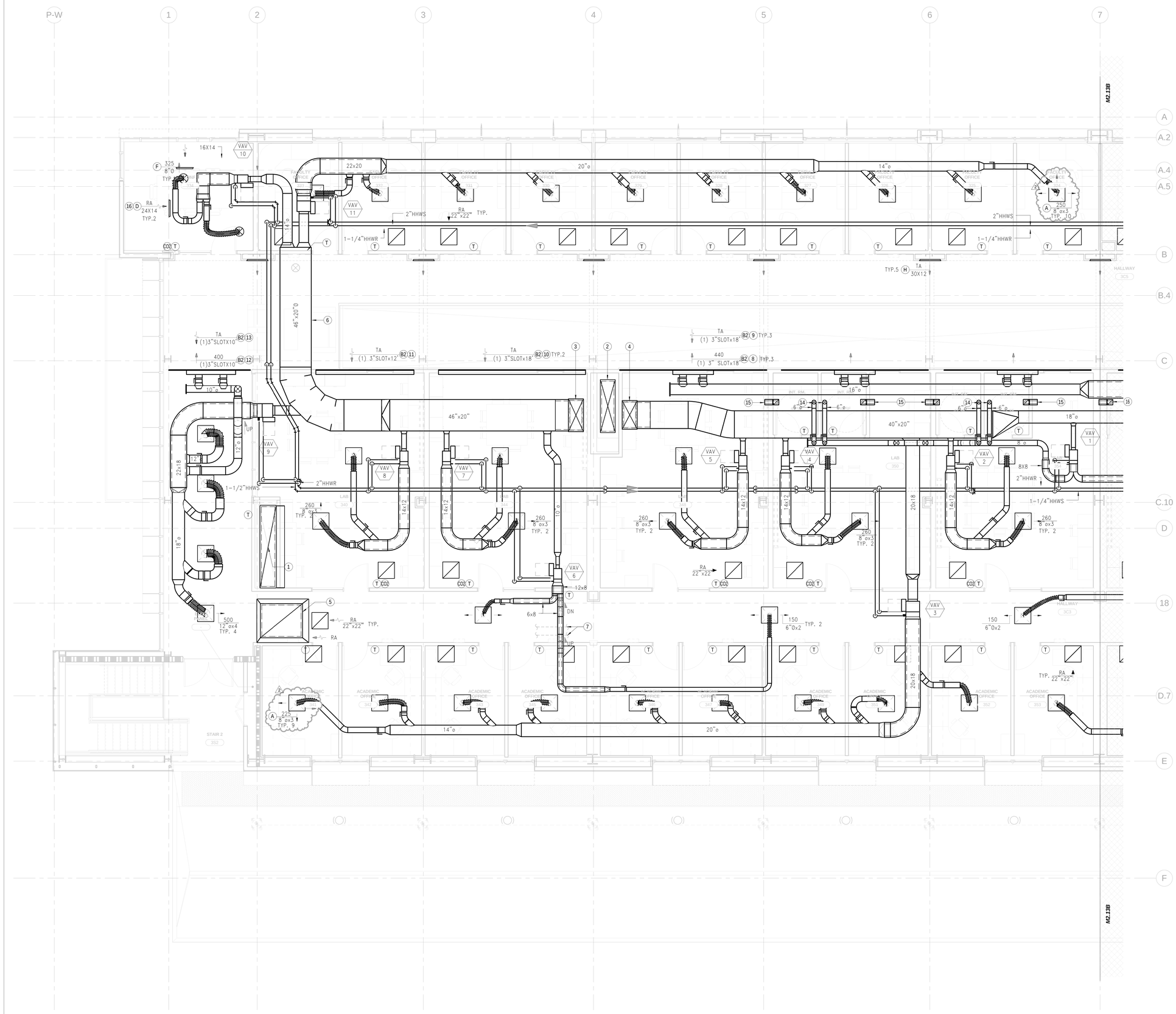

SHEET NOTES:

1. ARCHITECTURAL ACOUSTIC-LINED RA ENCLOSURE SERVES 2ND FLOOR CEILING PLENUM WESTSIDE RETURN, LINED SHEET METAL DUCT FROM TOP OF ENCLOSURE UP THROUGH ROOF.
2. 76x20 SA RISER.
3. 46x20 SA UP.
4. 40x20 SA UP.
5. 72x60 FLARED INLET BELL TO 60x48 DUCT RA RISER UP.
6. EXPOSED FLAT OVAL DUCT.
   ALL WELDED, SEAMLESS, SMOOTH WALL, ARCHITECTURAL GRADE FINISH.
7. SEE PLUMBING AND TELECOMM DRAWINGS.
8. 6' ACTIVE SUPPLY AIR SECTION. 12' USED FOR TRANSFER AIR. INSTALL BELOW 18' TRNASFER AIR SLOT ABOVE. SEE ARCH. DWGS.
9. INSTALL ABOVE 18' SUPPLY/TRANSFER AIR SLOT BELOW. SEE ARCH. DWGS.
10. TWO 18' TA SLOTS STACKED. SEE ARCH. DWGS.
11. 12' TA SLOT BELOW AND 12' TA SLOT ABOVE. SEE ARCH. DWGS.
12. 6' ACTIVE SUPPLY AIR SECTION. 4' USED FOR TRANSFER AIR. INSTALL BELOW 10' TRANSFER AIR SLOT ABOVE. SEE ARCH. DWGS.
13. INSTALL ABOVE 10' SUPPLY/TRANSFER AIR SLOT BELOW. SEE ARCH. DWGS.
14. 6"Ø DN TRANSITION TO 6X4 AND CONNECT TO 6X4 NECK TYPE I 1-WAY BLOW DIFFUSER. 40CFM.
15. 6X6 INTERNALLY LINED TD. CONNECT TO 6X6 NECK TYPE H RA GRILLE.
16. SEE 11/A7.56 FOR LOCATION OF SIDEWALL RA GRILLE AT SOFFIT.

Solomon Cordwell Buenz
www.scb.com
Chicago 312.896.1100
San Francisco 415.216.2450
Architecture Planning Interior Design

GAYNER ENGINEERS
1133 POST STREET
SAN FRANCISCO, CA 94109
TELEPHONE (415) 474-9500
FAX (415) 474-1363

UNIVERSITY OF CALIFORNIA
MERCED
FIRE MARSHAL
Approval of this plan does not authorize or approve any omission or deviation from applicable regulations. Final approval is subject to field inspection One set of approved plans shall be available on the Project site at all times.
Reviewed by: _____
Date: _____
UCM Project # : 300290

NO.	DATE	DESCRIPTION
2	02.27.2014	ADDENDUM NO. 2
	12.20.2013	100% CONSTRUCTION DOCUMENTS
	10.21.2013	90% CONSTRUCTION DOCUMENTS
	07.26.2013	50% CONSTRUCTION DOCUMENTS
	02.27.2013	100% DESIGN DEVELOPMENT
	01.28.2013	100% SCHEMATIC DESIGN

NO.	DATE	DESCRIPTION

CLASSROOM AND ACADEMIC OFFICE BUILDING

UCMERCED

© 2012 Solomon Cordwell Buenz

REGISTERED PROFESSIONAL ENGINEER NICHOLAS MITEROV No. 19,414 Exp. 09-30-15 STATE OF CALIFORNIA

ENLARGED THIRD FLOOR PLAN

Scale: 1/4" = 1'-0"
Drawn By: NM
Project Number: 2012040
Sheet Number: M2.13A

2/25/2014 6:56:19 PM

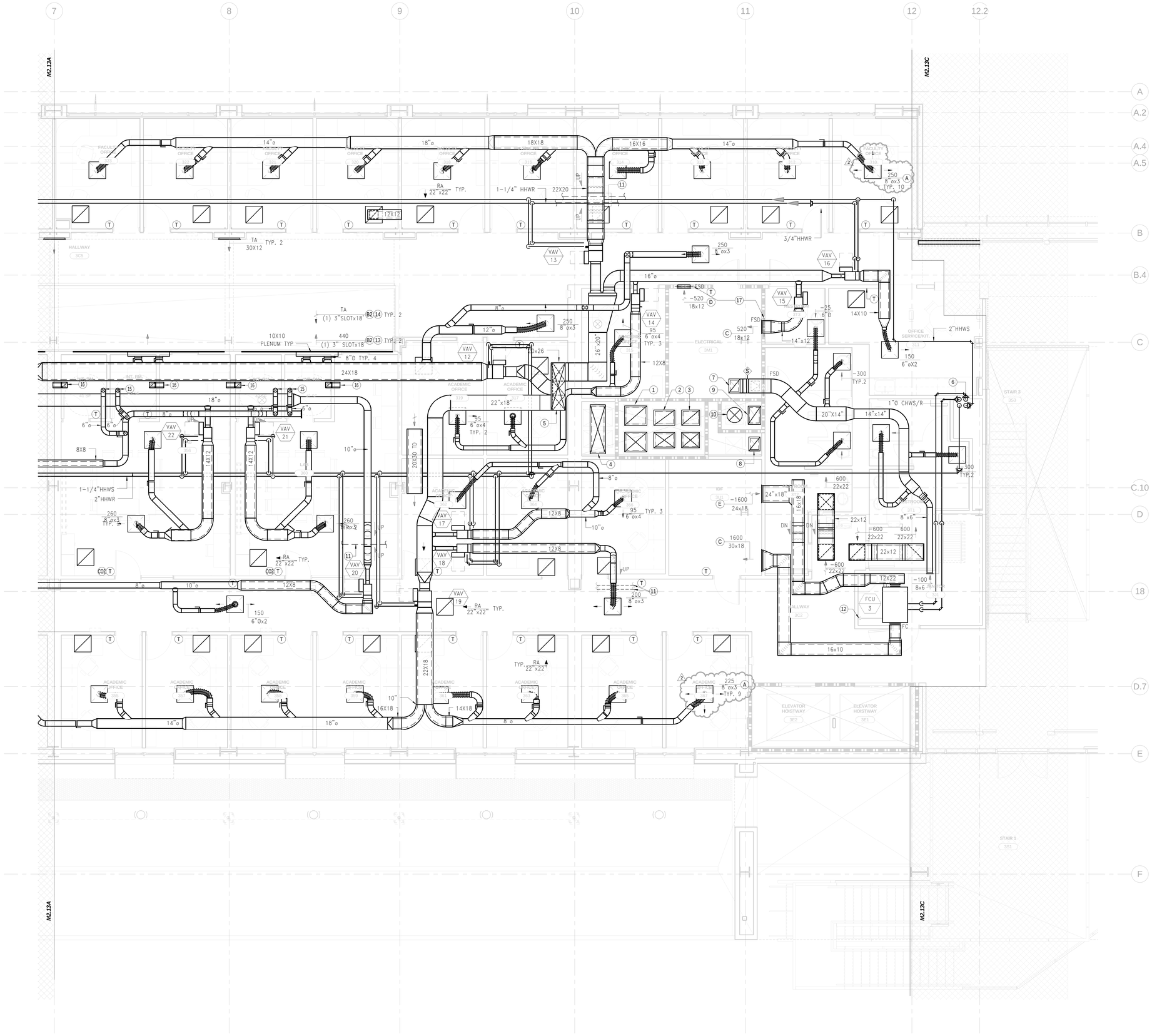

SHEET NOTES:

1. 30x26 SA AND EA RISERS – 210 SEAT LECTURE HALL.
2. 28x20 SA AND EA RISERS – 150 SEAT LECTURE HALL.
3. 24x20 SA AND EA RISERS – 120 SEAT LECTURE HALL.
4. 68x20 SA RISER.
5. 66x20 SA UP.
6. 4"ø CHWS/R AND 2-1/2"ø HHWS/R RISERS.
7. 20x14 EA UP.
8. 20x16 EA RISER. LEVEL 2 RESTROOMS.
9. 24x16 EA RISER. LEVEL 1 RESTROOMS.
10. 22"ø SA RISER. LEVEL 1 RESTROOMS.
11. SEE PLUMBING DRAWING P2.11B.
12. 1" CONDENSATE DRAIN TO SINK.
13. 6' ACTIVE SUPPLY AIRSECTION. 12' USED FOR TRANSFER AIR. INSTALL BELOW 18' TRANSFER. AIR SLOT ABOVE. SEE ARCH. DWGS.
14. INSTALL ABOVE 18' SUPPLY/TRANSFER AIR SLOT BELOW. SEE ARCH. DWGS.
15. 6"Ø DN TRANSITION TO 6X4 AND CONNECT TO 6X4 NECK TYPE I 1-WAY BELOW DIFFUSER. 40CFM.
16. 6X6 INTERNAL LINED TD. CONNECT TO 6X6 NECK TYPE H RA GRILLE.
17. FSD CONTROLLED BY AREA SMOKE DETECTION SYSTEM. SEE ELECT. DWGS.

Solomon Cordwell Buenz
www.scb.com

Chicago 312.896.1100
San Francisco 415.216.2450

Architecture Planning Interior Design

GAYNER ENGINEERS
1133 POST STREET
SAN FRANCISCO, CA 94109
TELEPHONE (415) 474-9500
FAX (415) 474-1363

UNIVERSITY OF CALIFORNIA
MERCED
FIRE MARSHAL
Approval of this plan does not waive any ordinance or approve any omission or deviation from applicable regulations. Final approval is subject to field inspection One set of approved plans shall be available on the Project site at all times.
Reviewed by: _____
Date: _____
UCM Project # 309290

NO.	DATE	DESCRIPTION	NO.	DATE	DESCRIPTION
2	02.27.2014	ADDENDUM NO. 2			
	12.20.2013	100% CONSTRUCTION DOCUMENTS			
	10.21.2013	90% CONSTRUCTION DOCUMENTS			
	07.26.2013	50% CONSTRUCTION DOCUMENTS			
	02.27.2013	100% DESIGN DEVELOPMENT			
	01.28.2013	100% SCHEMATIC DESIGN			

CLASSROOM AND ACADEMIC OFFICE BUILDING
UCMERCED

© 2012 Solomon Cordwell Buenz

REGISTERED PROFESSIONAL ENGINEER NICHOLAS MIRONOV No. 19,414 Exp. 09-30-15 OF CALIFORNIA

ENLARGED THIRD FLOOR PLAN

Scale: 1/4" = 1'-0"
Drawn By: NM
Project Number: 2012040
Sheet Number: M2.13B

2/25/2014 6:56:50 PM

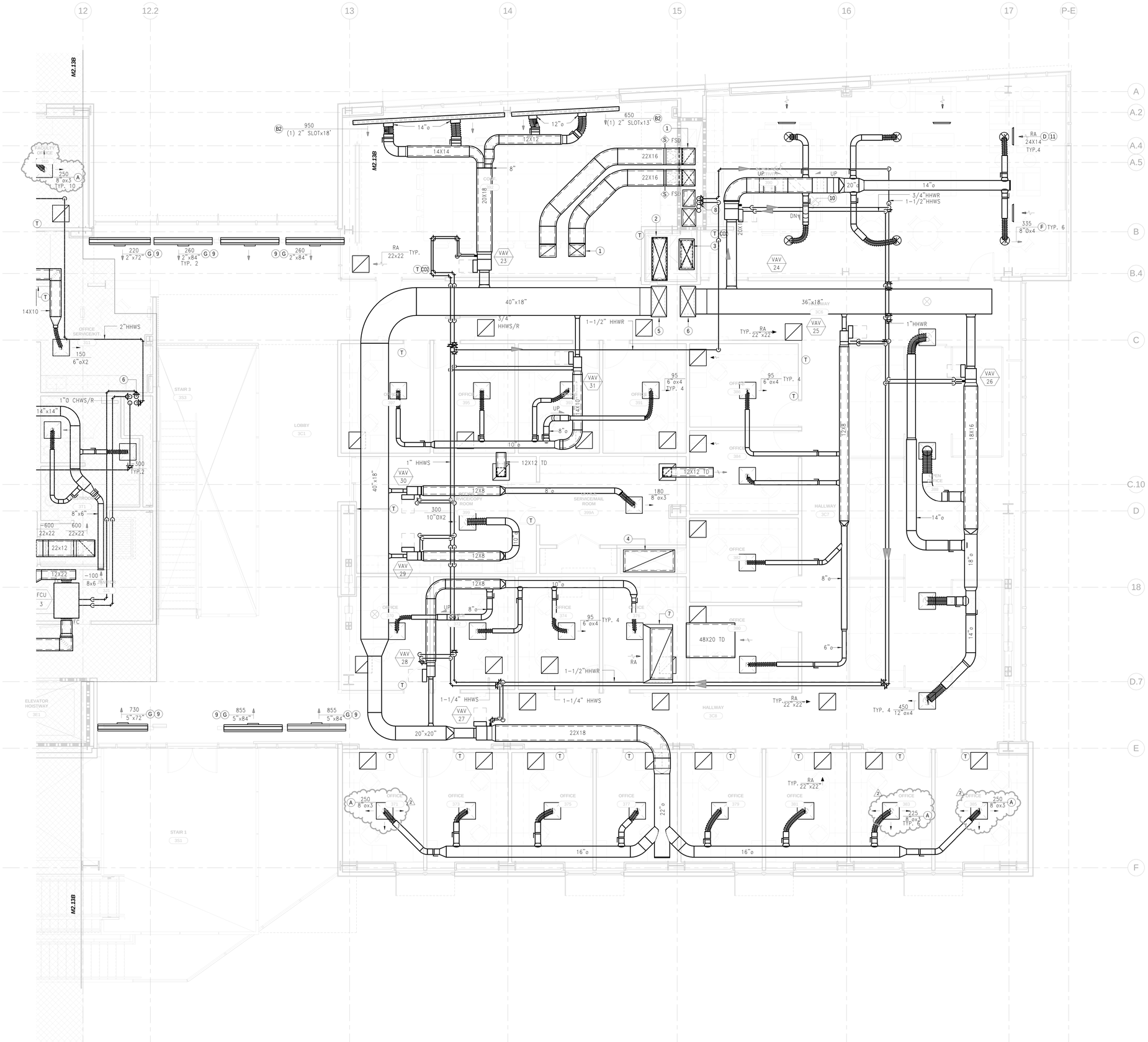

SHEET NOTES:

1. 22x16 SA AND EA RISERS – 90 SEAT LECTURE HALL.
2. 60x20 SA RISER.
3. 40x16 SA RISER.
4. ARCHITECTURAL ACOUSTIC-LINED ENCLOSURE SERVES 2ND FLOOR CEILING PLENUM EAST SIDE RETURN. LINED SHEET METAL DUCT FROM TOP OF ENCLOSURE UP THROUGH ROOF.
5. 40x18 SA RISER.
6. 36x18 SA RISER.
7. 84x42 FLARED INLET BELL TO 72x30 DUCT RA RISER UP.
8. 2-1/2"ø CHWS/R AND 2"ø HHWS/R RISERS.
9. FLOOR REGISTER SUPPLIED FROM 2ND FLOOR.
10. SEE PLUMBING DRAWING P2.13C.
11. SEE 11/A7.56 FOR LOCATION OF SIDEWALL RA GRILLE AT SOFIT.

Solomon Cordwell Buenz
www.scb.com
Chicago 312.896.1100
San Francisco 415.216.2450
Architecture Planning Interior Design

GAYNER ENGINEERS
1133 POST STREET
SAN FRANCISCO, CA 94109
TELEPHONE (415) 474-9500
FAX (415) 474-1363

UNIVERSITY OF CALIFORNIA
MERCED
FIRE MARSHAL
Approval of this plan does not authorize or approve any omission or deviation from applicable regulations. Final approval is subject to field inspection One set of approved plans shall be available on the Project site at all times.
Reviewed by: _____
Date: _____
UCM Project # : 300230

NO.	DATE	DESCRIPTION	NO.	DATE	DESCRIPTION
2	02.27.2014	ADDENDUM NO. 2			
	12.20.2013	100% CONSTRUCTION DOCUMENTS			
	10.21.2013	90% CONSTRUCTION DOCUMENTS			
	07.26.2013	50% CONSTRUCTION DOCUMENTS			
	02.27.2013	100% DESIGN DEVELOPMENT			
	01.28.2013	100% SCHEMATIC DESIGN			

CLASSROOM AND ACADEMIC OFFICE BUILDING
UCMERCED

© 2012 Solomon Cordwell Buenz

REGISTERED PROFESSIONAL ENGINEER NIKOLAS MATROVV No. 19,414 Exp. 09-30-13 CIVIL STATE OF CALIFORNIA

ENLARGED THIRD FLOOR PLAN

Scale: 1/4" = 1'-0"
Drawn By: NM
Project Number: 2012040
Sheet Number: M2.13C

2/25/2014 6:57:20 PM

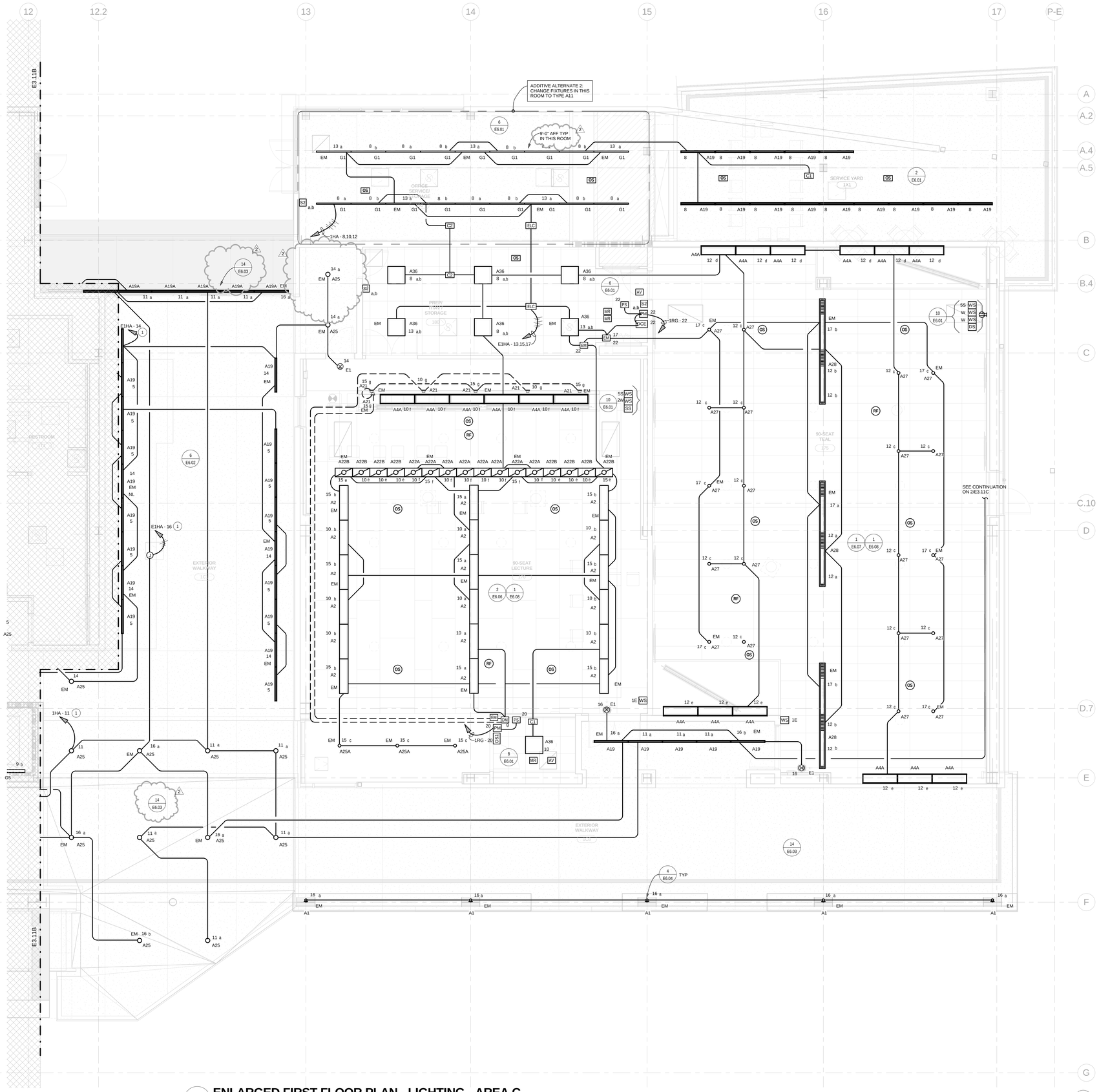

1 ENLARGED FIRST FLOOR PLAN - LIGHTING - AREA C

1/4" = 1'-0"

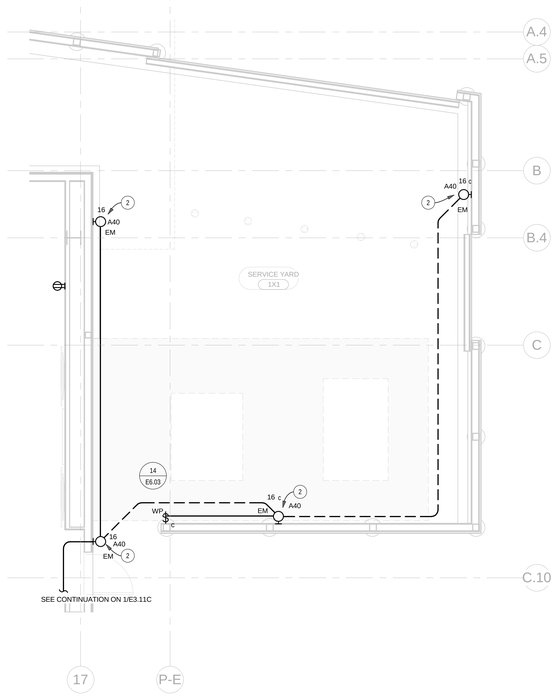

2 SERVICE YARD

1/4" = 1'-0"

GENERAL NOTES:

1. LOW VOLTAGE CONTROL WIRING AND CONDUITS NOT SHOWN ON PLAN. REFER TO DIAGRAMS FOR REQUIREMENTS.
2. PANELBOARD DESIGNATIONS ON HOMERUNS DO NOT INCLUDE BUILDING NUMBER.
3. REFER TO ARCHITECTURAL ELEVATIONS AND REFLECTED CEILING PLANS FOR EXACT LOCATION AND MOUNTING HEIGHT OF LIGHT FIXTURES AND EXIT SIGNS UNLESS OTHERWISE INDICATED.

SHEET NOTES:

1. CIRCUIT VIA LIGHTING CONTROL PANEL 1LCP.
2. PROVIDE 2'/8" OCTAGON BOX WITH 2 1/2" BOX EXTENSION TO ACCOMODATE FIXTURE TRANSFORMER.

Solomon Cordwell Buenz
www.scb.com
Chicago 312.896.1100
San Francisco 415.216.2450
Architecture Planning Interior Design

GAYNER ENGINEERS
1133 POST STREET
SAN FRANCISCO, CA 94109
TELEPHONE (415) 474-9500
FAX (415) 474-1363

UNIVERSITY OF CALIFORNIA
MERCED
FIRE MARSHAL
Approval of this plan does not waive or approve any omission or violation of any applicable regulations. Final approval is subject to field inspection One set of approved plans shall be available on the Project site at all times.
Reviewed by: _____
Date: _____
UCM Project # 306290

NO.	DATE	DESCRIPTION
2	02.27.2014	ADDENDUM NO. 2
	12.20.2013	100% CONSTRUCTION DOCUMENTS
	10.21.2013	90% CONSTRUCTION DOCUMENTS
	07.26.2013	50% CONSTRUCTION DOCUMENTS

CLASSROOM AND ACADEMIC OFFICE BUILDING
UCMERCED

© 2012 Solomon Cordwell Buenz

REGISTERED PROFESSIONAL ENGINEER DANIEL CHEUK-YU LEE No. 11735 Exp. 30-11 ELECTRICAL STATE OF CALIFORNIA

ENLARGED FIRST FLOOR PLAN - LIGHTING

Scale: 1/4" = 1'-0"
Drawn By: Author
Project Number: 2012040
Sheet Number: E3.11C

2/25/2014 6:31:36 PM

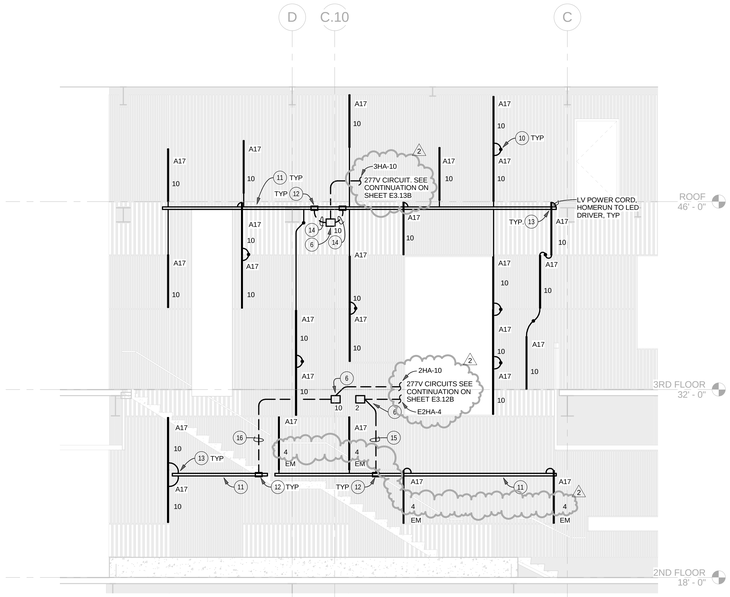

GENERAL NOTES:

1. EACH FIXTURE IS EQUIPPED WITH AN 8FT LONG LV POWER CORD. FIELD CUT AND SPLICE AS REQUIRED TO MAKE CONNECTIONS BETWEEN FIXTURES
2. PROVIDE ADDITIONAL LV CABLE TO COMPLETE THE HOMERUNS TO THE LED DRIVERS: CABLE SHALL BE 2 CONDUCTORS, #12 AWG STRANDED COPPER, 300V INSULATION BLACK PVC JACKET. SPLICES TO CABLES PROVIDED WITH FIXTURES SHALL BE MADE WITHIN THE SURFACE METAL RACEWAY.
3. ALL LV WIRING SPLICES SHALL BE MADE WITH CRIMP TYPE CONNECTORS AND BLACK HEAT SHRINK INSULATION FULLY COVERING THE CONNECTIONS.

6 LOBBY LIGHTING ELEVATION

1/4" = 1'-0"

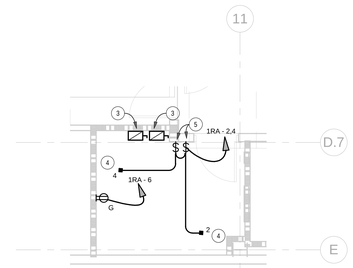

4 ELEVATOR RM. 1M3 - ENLARGED POWER PLAN

1/4" = 1'-0"

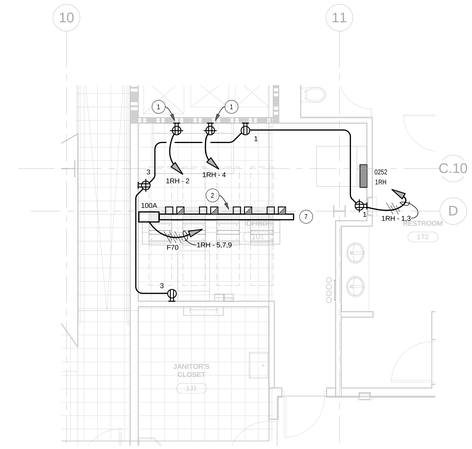

1 IDF/BDF 1U1 - ENLARGED POWER PLAN

1/4" = 1'-0"

GENERAL NOTES:

1. COORDINATE EXACT LOCATION OF ALL ELECTRICAL COMPONENTS AND DEVICES WITH SECURITY SYSTEM AND TELECOMMUNICATIONS SYSTEM CONTRACTORS PRIOR TO INSTALLATION
2. LOW VOLTAGE CONTROL WIRING NO SHOWN ON PLAN. REFER TO DIAGRAMS FOR REQUIREMENT.
3. PANELBOARD DESIGNATIONS ON HOMERUNS DO NOT INCLUDE BUILDING NUMBER.

SHEET NOTES:

1. FOR SECURITY EQUIPMENT.
2. SEE TELECOMMUNICATIONS DRAWINGS FOR EXACT LOCATION AND MOUNTING HEIGHT.
3. PROVIDE WITH THE FOLLOWING:
   A. LOCK-OFF (OPEN) DEVICE.
   B. AUXILIARY CONTACT, WHICH IS CLOSED WHEN DISCONNECT SWITCH IS CLOSED (ON) AND IS OPEN WHEN DICONNECT SWITCH IS OPEN (OFF).
   C. 2#12-1/2"C FOR AUXILIARY CONTACTS TO ELEVATOR CONTROLLER.
4. FIRE ALARM SYSTEM CONNECTION.
5. PROVIDE WITH LOCK-ON (OPEN) DEVICE.
6. REMOTE LED DRIVER FOR A17 FIXTURES IN TOILET ROOM CEILING SPACE BEYOND.
7. REFER TO TELECOM DRAWING T4.11 FOR ELEVATIONS AND LOCATION OF DEVICES.
8. REFER TO TELECOM DRAWING T4.12 FOR ELEVATIONS AND LOCATION OF DEVICES.
9. REFER TO TELECOM DRAWING T4.13 FOR ELEVATIONS AND LOCATION OF DEVICES.
10. LV WIRING SPLICE OUTSIDE OF RACEWAY
11. WIREMOLD G4000, OR EQUAL SURFACE METAL RACEWAY MOUNTED TO WALL BEHIND WOOD SLATS. RACEWAY SHALL BE FIELD PAINTED BLACK.
12. 4" SQUARE x 2 1/8" DEEP BOX WITH 1-GANG OPENING POSITIONED WITH LONG AXIS HORIZONTAL FOR CONDUIT/WIRE FEED TO RACEWAY.
13. LV POWER CORD SHALL ENTER SIDE OF RACEWAY AND HOMERUN TO THE REMOTE LED DRIVER VIA RACEWAY AND CONDUITS. FIELD DRILL HOLES IN RACEWAY FOR CABLE ENTRY AND PROVIDE RUBBER GROMMET AT EACH HOLE.
14. 2-3/4"C CONCEALED IN WALL WITH 3 LV CABLES IN EACH.
15. 1"C CONCEALED IN WALL WITH 4 LV CABLES.
16. 3/4"C CONCEALED IN WALL WITH 2 LV CABLES.

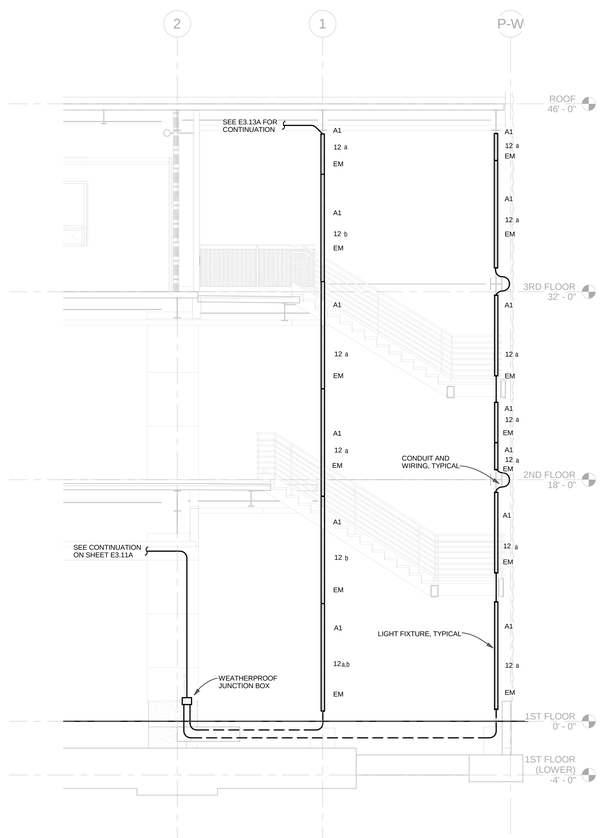

5 STAIR LIGHTING ELEVATION

1/4" = 1'-0"

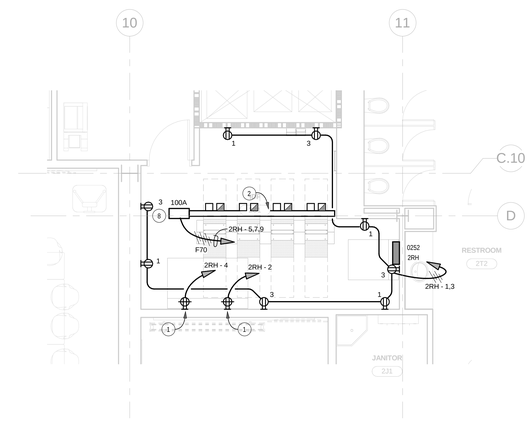

2 IDF 2U1 - ENLARGED POWER PLAN

1/4" = 1'-0"

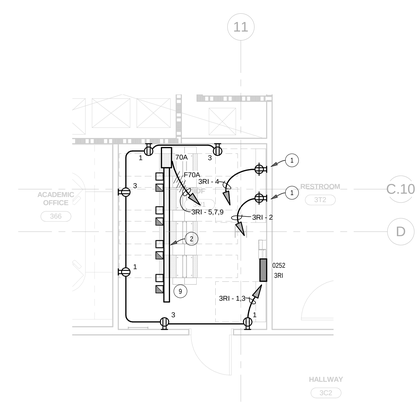

3 IDF 3U1 - ENLARGED POWER PLAN

1/4" = 1'-0"

Solomon Cordwell Buenz
www.scb.com
Chicago 312.896.1100
San Francisco 415.216.2450
Architecture Planning Interior Design

GAYNER ENGINEERS
1133 POST STREET
SAN FRANCISCO, CA 94109
TELEPHONE (415) 474-9500
FAX (415) 474-1363

UNIVERSITY OF CALIFORNIA
MERCED
FIRE MARSHAL
Approval of this plan does not authorize or approve any omission or deviation from applicable regulations. Final approval is subject to field inspection One set of approved plans shall be available on the Project site at all times.
Reviewed by: _____
Date: _____
UCM Project # 306200

NO.	DATE	DESCRIPTION	NO.	DATE	DESCRIPTION
2	02.27.2014	ADDENDUM NO. 2			
	12.20.2013	100% CONSTRUCTION DOCUMENTS			
	10.21.2013	90% CONSTRUCTION DOCUMENTS			
	07.26.2013	50% CONSTRUCTION DOCUMENTS			
	04.15.2013	100% DESIGN DEVELOPMENT			

CLASSROOM AND ACADEMIC OFFICE BUILDING
UCMERCED

© 2012 Solomon Cordwell Buenz

REGISTERED PROFESSIONAL ENGINEER JAMES CHEUK-YU LEE No. E11735 Exp. 12-31-14 ELECTRICAL STATE OF CALIFORNIA

ENLARGED PLANS AND ELEVATIONS

Scale: 1/4" = 1'-0"
Drawn By: EG
Project Number: 2012040
Sheet Number: E5.11

2/25/2014 6:31:48 PM

VOLTS: 120/208V, 3Ø, 4W
MAIN: 100 A / 3P CB
INT. CAP. : 22 KAIC

PANEL **0252-3RA**

FEEDER: SEE 1-LINE DIAGRAM
BUSSING: 100 A
LOCATION: ELECTRICAL 3M1
MOUNTED SURFACE

SERVICE	LTG kVA	REC kVA	MTR kVA	MISC kVA	CB A	P	CKT	S/N	CKT	CB P	A	MISC kVA	MTR kVA	REC kVA	LTG kVA	SERVICE
LIGHTS - AHU-3	1.20				20	1	1		2	1	20				1.20	LIGHTS - AHU-4
REC I- AHU-3		1.20			20	1	3		4	1	20			1.20		REC - AHU-4
DOOR PS ELECTRICAL 3M1				0.18	20	1	5		6	1	20	0.36		0.18		FV, SV RESTROOM 3T2
REC JANITOR 3J1		0.36			20	1	7		8	1	20	0.36		0.18		FV, SV RESTROOM 3T1
REC JANITOR 3J1		0.36			20	1	9		10	1	20	1.40				HAND DRYER RESTROOM 3T2
REC JANITOR 3J1		0.36			20	1	11		12	1	20	1.40				HAND DRYER RESTROOM 3T1
REC JANITOR 3J1		0.36			20	1	13		14	1	20			0.36		REC RESTROOM 3T1
TASK LTG OFF- SERV/KIT. 311	0.05				20	1	15		16	1	20	0.58				EWC HALLWAY 3C2
RDVP ELECTRICAL 3M1				0.30	20	1	17		18	1	20	0.30				3LCP ELECTRICAL 3M1
RPS ELECTRICAL 3M1				0.38	20	1	19		20	1	20	0.80				EMCS
SPARE					20	1	21		22	1	20	0.80				EMCS
SPARE					20	1	23		24	1	20					SPARE
SPARE					20	1	25		26	1	20					SPARE
SPARE					20	1	27		28	1	20					SPARE
SPARE					20	1	29		30	1	20					SPARE
SPACE					--	--	31		32	--	--					SPACE
SPACE					--	--	33		34	--	--					SPACE
SPACE					--	--	35		36	--	--					SPACE
SPACE					--	--	37		38	3	20		1.44			FCU-3 - JANITOR 3J1
SPACE					--	--	39		40	--	--		1.44			--
SPACE					--	--	41		42	--	--		1.44			--
												6.86	4.32	4.56	2.45	TOTAL

LOAD CLASSIFICATION	CONNECTED LOAD	DEMAND FACTOR	ESTIMATED DEMAND	PANEL TOTALS			
LTG	2.45 kVA	125.00%	3.06 kVA	ØA :	6.64 kVA	=	58.1 A
REC	4.56 kVA	100.00%	4.56 kVA	ØB :	7.03 kVA	=	61.3 A
MTR	4.32 kVA	125.00%	5.40 kVA	ØC :	4.52 kVA	=	37.7 A
MISC	6.86 kVA	100.00%	6.86 kVA				
				CALCULATED DEMAND =	19.88 kVA	=	55.2 A
				TOTAL WITH 25% SPARE =	24.85 kVA	=	69.0 A

MINIMUM FEEDER SIZE : FIRST 10KVA REC@100%+50% REMAINDER REC+125% LTG+100% MTR+25% LARGEST MTR+100% MISC

VOLTS: 120/208V, 3Ø, 4W
MAIN: 100 A / 3P CB
INT. CAP. : 22 KAIC

PANEL **0252-3RB**

FEEDER: SEE 1-LINE DIAGRAM
BUSSING: 100 A
LOCATION: ELECTRICAL 3M1
MOUNTED SURFACE

SERVICE	LTG kVA	REC kVA	MTR kVA	MISC kVA	CB A	P	CKT	S/N	CKT	CB P	A	MISC kVA	MTR kVA	REC kVA	LTG kVA	SERVICE
REC FACULTY OFFICE 310		0.90			20	1	1		2	1	20			1.08		REC ACADEMIC OFFICE 367
REC FACULTY OFFICE 312		0.90			20	1	3		4	1	20			1.08		REC ACADEMIC OFFICE 365
REC FACULTY OFFICE 313		0.90			20	1	5		6	1	20			1.08		REC ACADEMIC OFFICE 363
REC FACULTY OFFICE 314		0.90			20	1	7		8	1	20			1.08		REC ACADEMIC OFFICE 361
REC FACULTY OFFICE 316		0.90			20	1	9		10	1	20			1.08		REC ACADEMIC OFFICE 366
REC FACULTY OFFICE 318		0.90			20	1	11		12	1	20			1.08		REC ACADEMIC OFFICE 364
REC ACADEMIC OFFICE 315		1.08			20	1	13		14	1	20			1.08		REC ACADEMIC OFFICE 362
REC ACADEMIC OFFICE 317		1.08			20	1	15		16	1	20			0.54		REC ELECTRICAL 3M1
REC ACADEMIC OFFICE 319		1.08			20	1	17		18	1	20			0.18		REC OFFICE SERVICE/KIT. 311
REC OFFICE SERVICE/KIT. 311		0.18			20	1	19		20	1	20			0.18		REC OFFICE SERVICE/KIT. 311
REC OFFICE SERVICE/KIT. 311		0.18			20	1	21		22	1	20			0.36		REC OFFICE SERVICE/KIT. 311
REC HALLWAY 3C3		0.72			20	1	23		24	1	20			0.18		REC OFFICE SERVICE/KIT. 311
							25		26	1	20			0.36		REC HALLWAY 3C5
SPARE					20	1	27		28	1	20					SPARE
SPARE					20	1	29		30	1	20					SPARE
SPARE					20	1	31		32	1	20					SPARE
SPARE					20	1	33		34	1	20					SPARE
SPARE					20	1	35		36	--	--					SPACE
SPACE					--	--	37		38	--	--					SPACE
SPACE					--	--	39		40	--	--					SPACE
SPACE					--	--	41		42	--	--					SPACE
														19.08		TOTAL

LOAD CLASSIFICATION	CONNECTED LOAD	DEMAND FACTOR	ESTIMATED DEMAND	PANEL TOTALS			
REC	19.08 kVA	76.21%	14.54 kVA	ØA :	6.84 kVA	=	57.0 A
				ØB :	6.12 kVA	=	51.0 A
				ØC :	6.12 kVA	=	51.0 A
				CALCULATED DEMAND =	14.54 kVA	=	40.4 A
				TOTAL WITH 25% SPARE =	18.18 kVA	=	50.4 A

MINIMUM FEEDER SIZE : FIRST 10KVA REC@100%+50% REMAINDER REC+125% LTG+100% MTR+25% LARGEST MTR+100% MISC

VOLTS: 120/208V, 3Ø, 4W
MAIN: 100 A / 3P CB
INT. CAP. : 22 KAIC

PANEL **0252-3RC**

FEEDER: SEE 1-LINE DIAGRAM
BUSSING: 100 A
LOCATION: ELECTRICAL 3M1
MOUNTED SURFACE

SERVICE	LTG kVA	REC kVA	MTR kVA	MISC kVA	CB A	P	CKT	S/N	CKT	CB P	A	MISC kVA	MTR kVA	REC kVA	LTG kVA	SERVICE
REC FACULTY OFFICE 320		0.90			20	1	1		2	1	20			1.08		REC LAB 360
REC FACULTY OFFICE 321		0.90			20	1	3		4	1	20			0.90		REC LAB 360
REC FACULTY OFFICE 322		0.90			20	1	5		6	1	20			1.08		REC LAB 360
REC FACULTY OFFICE 323		0.90			20	1	7		8	1	20			0.54		REC LAB 360
REC FACULTY OFFICE 324		0.90			20	1	9		10	1	20			1.08		REC LAB 356
REC FACULTY OFFICE 325		0.90			20	1	11		12	1	20			0.90		REC LAB 356
REC ACADEMIC OFFICE 359		1.08			20	1	13		14	1	20			1.08		REC LAB 356
REC ACADEMIC OFFICE 358		1.08			20	1	15		16	1	20			0.54		REC LAB 356
REC ACADEMIC OFFICE 357		1.08			20	1	17		18	1	20			1.08		REC LAB 354
REC ACADEMIC OFFICE 355		1.08			20	1	19		20	1	20			0.90		REC LAB 354
REC ACADEMIC OFFICE 353		1.08			20	1	21		22	1	20			1.08		REC LAB 354
REC ACADEMIC OFFICE 352		1.08			20	1	23		24	1	20			0.54		REC LAB 354
SPARE					20	1	25		26	1	20					SPARE
SPARE					20	1	27		28	1	20					SPARE
SPARE					20	1	29		30	1	20					SPARE
SPARE					20	1	31		32	1	20					SPARE
SPARE					20	1	33		34	--	--					SPACE
SPACE					--	--	35		36	--	--					SPACE
SPACE					--	--	37		38	--	--					SPACE
SPACE					--	--	39		40	--	--					SPACE
SPACE					--	--	41		42	--	--					SPACE
														22.68		TOTAL

LOAD CLASSIFICATION	CONNECTED LOAD	DEMAND FACTOR	ESTIMATED DEMAND	PANEL TOTALS			
REC	22.68 kVA	72.05%	16.34 kVA	ØA :	7.56 kVA	=	63.0 A
				ØB :	7.56 kVA	=	63.0 A
				ØC :	7.56 kVA	=	63.0 A
				CALCULATED DEMAND =	16.34 kVA	=	45.4 A
				TOTAL WITH 25% SPARE =	20.43 kVA	=	56.7 A

MINIMUM FEEDER SIZE : FIRST 10KVA REC@100%+50% REMAINDER REC+125% LTG+100% MTR+25% LARGEST MTR+100% MISC

VOLTS: 120/208V, 3Ø, 4W
MAIN: 100 A / 3P CB
INT. CAP. : 22 KAIC

PANEL **0252-3RD**

FEEDER: SEE 1-LINE DIAGRAM
BUSSING: 100 A
LOCATION: STAIR 2 CLOSET 3S2
MOUNTED SURFACE

SERVICE	LTG kVA	REC kVA	MTR kVA	MISC kVA	CB A	P	CKT	S/N	CKT	CB P	A	MISC kVA	MTR kVA	REC kVA	LTG kVA	SERVICE
REC CONF. 334		0.36			20	1	1		2	1	20	1.29				MOTORIZED SHADE CONF. 334
REC CONF. 334		0.36		0.36	20	1	3		4	1	20			0.54		REC HALLWAY 3C5
AV EQUIPMENT CONF. 334				0.60	20	1	5		6	1	20			0.36		REC HALLWAY 3C4
AV EQUIPMENT CONF. 334				0.60	20	1	7		8	1	20			0.54		REC HALLWAY 3C4
REC FACULTY OFFICE 333		0.90			20	1	9		10	1	20			0.90		REC LAB 340
REC FACULTY OFFICE 332		0.90			20	1	11		12	1	20			1.08		REC LAB 340
REC FACULTY OFFICE 331		0.90			20	1	13		14	1	20			0.90		REC LAB 340
REC FACULTY OFFICE 330		0.90			20	1	15		16	1	20			0.54		REC LAB 340
REC FACULTY OFFICE 329		0.90			20	1	17		18	1	20			1.08		REC LAB 344
REC FACULTY OFFICE 328		0.90			20	1	19		20	1	20			1.08		REC LAB 344
REC FACULTY OFFICE 327		0.90			20	1	21		22	1	20			1.08		REC LAB 344
REC FACULTY OFFICE 326		0.90			20	1	23		24	1	20			0.54		REC LAB 344
SPARE					20	1	25		26	1	20					SPARE
SPARE					20	1	27		28	1	20					SPARE
SPARE					20	1	29		30	1	20					SPARE
SPARE					20	1	31		32	1	20					SPARE
SPARE					20	1	33		34	--	--					SPACE
SPACE					--	--	35		36	--	--					SPACE
SPACE					--	--	37		38	--	--					SPACE
SPACE					--	--	39		40	--	--					SPACE
SPACE					--	--	41		42	--	--					SPACE
												2.85		16.56		TOTAL

LOAD CLASSIFICATION	CONNECTED LOAD	DEMAND FACTOR	ESTIMATED DEMAND	PANEL TOTALS			
REC	16.56 kVA	80.19%	13.28 kVA	ØA :	6.57 kVA	=	54.9 A
MISC	2.85 kVA	100.00%	2.85 kVA	ØB :	6.48 kVA	=	54.2 A
				ØC :	6.36 kVA	=	53.0 A
				CALCULATED DEMAND =	16.13 kVA	=	44.8 A
				TOTAL WITH 25% SPARE =	20.16 kVA	=	56.0 A

MINIMUM FEEDER SIZE : FIRST 10KVA REC@100%+50% REMAINDER REC+125% LTG+100% MTR+25% LARGEST MTR+100% MISC

VOLTS: 120/208V, 3Ø, 4W
MAIN: 100 A / 3P CB
INT. CAP. : 22 KAIC

PANEL **0252-3RE**

FEEDER: SEE 1-LINE DIAGRAM
BUSSING: 100 A
LOCATION: STAIR 2 CLOSET 3S2
MOUNTED SURFACE

SERVICE	LTG kVA	REC kVA	MTR kVA	MISC kVA	CB A	P	CKT	S/N	CKT	CB P	A	MISC kVA	MTR kVA	REC kVA	LTG kVA	SERVICE
REC LAB 348		1.08			20	1	1		2	1	20			1.08		REC ACADEMIC OFFICE 341
REC LAB 348		1.08			20	1	3		4	1	20			1.08		REC ACADEMIC OFFICE 342
REC LAB 348		1.08			20	1	5		6	1	20			1.08		REC ACADEMIC OFFICE 343
REC LAB 348		0.54			20	1	7		8	1	20			1.08		REC ACADEMIC OFFICE 345
REC LAB 350		1.08			20	1	9		10	1	20			1.08		REC ACADEMIC OFFICE 346
REC LAB 350		0.90			20	1	11		12	1	20			1.08		REC ACADEMIC OFFICE 347
REC LAB 350		1.08			20	1	13		14	1	20			1.08		REC ACADEMIC OFFICE 349
REC LAB 350		0.54			20	1	15		16	1	20			1.08		REC ACADEMIC OFFICE 351
LIGHTS - AHU-6	1.20				20	1	17		18	1	20	0.36				3LCP OPERATOR, PS
REC - AHU-6		1.20			20	1	19		20	1	20				1.20	LIGHTS - AHU-5
REC ROOF		0.54			20	1	21		22	1	20			1.20		REC - AHU-5
REC ROOF		0.36			20	1	23		24	1	20					SPARE
SPARE					20	1	25		26	1	20					SPARE
SPARE					20	1	27		28	1	20					SPARE
SPARE					20	1	29		30	1	20					SPARE
SPARE					20	1	31		32	1	20					SPARE
SPACE					--	--	33		34	--	--					SPACE
SPACE					--	--	35		36	--	--					SPACE
SPACE					--	--	37		38	--	--					SPACE
SPACE					--	--	39		40	--	--					SPACE
SPACE					--	--	41		42	--	--					SPACE
												0.36		19.32	2.40	TOTAL

LOAD CLASSIFICATION	CONNECTED LOAD	DEMAND FACTOR	ESTIMATED DEMAND	PANEL TOTALS			
LTG	2.40 kVA	125.00%	3.00 kVA	ØA :	8.34 kVA	=	71.6 A
REC	19.32 kVA	75.88%	14.66 kVA	ØB :	7.68 kVA	=	66.1 A
MISC	0.36 kVA	100.00%	0.36 kVA	ØC :	6.06 kVA	=	50.5 A
				CALCULATED DEMAND =	18.02 kVA	=	50.0 A
				TOTAL WITH 25% SPARE =	22.53 kVA	=	62.5 A

MINIMUM FEEDER SIZE : FIRST 10KVA REC@100%+50% REMAINDER REC+125% LTG+100% MTR+25% LARGEST MTR+100% MISC

VOLTS: 120/208V, 3Ø, 4W
MAIN: 70 A / 3P CB
INT. CAP. : 22 KAIC

PANEL **0252-3RI**

FEEDER: SEE 1-LINE DIAGRAM
BUSSING: 100 A
LOCATION: IDF 3U1
MOUNTED SURFACE

SERVICE	LTG kVA	REC kVA	MTR kVA	MISC kVA	CB A	P	CKT	S/N	CKT	CB P	A	MISC kVA	MTR kVA	REC kVA	LTG kVA	SERVICE
REC IDF 3U1		0.54			20	1	1		2	1	20	0.50				SECURITY EQPT IDF 3U1
REC IDF 3U1		0.54			20	1	3		4	1	20	0.50				SECURITY EQPT IDF 3U1
BUSWAY IDF 3U1				4.00	60	3	5		6	1	20					SPARE
--				4.00	--	--	7		8	1	20					SPARE
--				4.00	--	--	9		10	1	20					SPARE
SPARE					20	1	11		12	--	--					SPACE
SPARE					20	1	13		14	--	--					SPACE
SPACE					--	--	15		16	--	--					SPACE
SPACE					--	--	17		18	--	--					SPACE
													13.00		1.08	TOTAL

LOAD CLASSIFICATION	CONNECTED LOAD	DEMAND FACTOR	ESTIMATED DEMAND	PANEL TOTALS			
REC	1.08 kVA	100.00%	1.08 kVA	ØA :	5.04 kVA	=	43.3 A
MISC	13.00 kVA	100.00%	13.00 kVA	ØB :	5.04 kVA	=	43.3 A
				ØC :	4.00 kVA	=	33.3 A
				CALCULATED DEMAND =	14.08 kVA	=	39.1 A
				TOTAL WITH 25% SPARE =	17.60 kVA	=	48.9 A

MINIMUM FEEDER SIZE : FIRST 10KVA REC@100%+50% REMAINDER REC+125% LTG+100% MTR+25% LARGEST MTR+100% MISC

VOLTS: 120/208V, 3Ø, 4W
MAIN: 100 A / 3P CB
INT. CAP. :

PANEL **0252-3RF**

FEEDER: SEE 1-LINE DIAGRAM
BUSSING: 100 A
LOCATION: COPY ROOM CLOSET 399A
MOUNTED SURFACE

SERVICE	LTG kVA	REC kVA	MTR kVA	MISC kVA	CB A	P	CKT	S/N	CKT	CB P	A	MISC kVA	MTR kVA	REC kVA	LTG kVA	SERVICE
LIGHTS - AHU-1	1.20				20	1	1		2	1	20				1.20	LIGHTS - AHU-2
REC - AHU-1		1.20			20	1	3		4	1	20			1.20		REC - AHU-2
LIGHTS - AHU-7	1.20				20	1	5		6	1	20			0.90		REC CONF. 4H2
REC - AHU-7		1.20			20	1	7		8	1	20	0.60		0.37		REC FPD CONF. 392
MISC CONF. 392				1.72	20	1	9		10	1	20			0.72		REC CONF. 392
MISC CONF. 392				1.29	20	1	11		12	1	20	1.00				PROJ, PROJ SCRN CONF. 392
MISC CONF. 392				0.36	20	1	13		14	1	20	0.60				AV EQUIPMENT LG CONF 392A
REC SCHOLARLY ACTIVITY 390		0.54			20	1	15		16	1	20	0.60				AV EQUIPMENT LG CONF 392A
REC SCHOLARLY ACTIVITY 390		0.72			20	1	17		18	1	20			0.28		LTG SCHOLARLY ACTIVITY 390
REC SCHOLARLY ACTIVITY 390		0.18			20	1	19		20	1	20	0.18				MISC CONF. 392
REC ROOF		0.54			20	1	21		22	1	20	0.72				MISC HALLWAY 3C8
REC ROOF		0.36			20	1	23		24	1	20					SPARE
SPARE					20	1	25		26	1	20					SPARE
SPARE					20	1	27		28	1	20					SPARE
SPARE					20	1	29		30	1	20					SPARE
SPARE					20	1	31		32	1	20					SPARE
SPACE					--	--	33		34	--	--					SPACE
SPACE					--	--	35		36	--	--					SPACE
SPACE					--	--	37		38	--	--					SPACE
SPACE					--	--	39		40	--	--					SPACE
SPACE					--	--	41		42	--	--					SPACE
												7.07		7.93	3.88	TOTAL

LOAD CLASSIFICATION	CONNECTED LOAD	DEMAND FACTOR	ESTIMATED DEMAND	PANEL TOTALS			
LTG	3.88 kVA	125.00%	4.85 kVA	ØA :	5.89 kVA	=	49.3 A
REC	7.93 kVA	100.00%	7.93 kVA	ØB :	7.24 kVA	=	60.5 A
MISC	7.07 kVA	100.00%	7.07 kVA	ØC :	5.75 kVA	=	47.9 A
				CALCULATED DEMAND =	19.85 kVA	=	55.1 A
				TOTAL WITH 25% SPARE =	24.81 kVA	=	68.9 A

MINIMUM FEEDER SIZE : FIRST 10KVA REC@100%+50% REMAINDER REC+125% LTG+100% MTR+25% LARGEST MTR+100% MISC

VOLTS: 120/208V, 3Ø, 4W
MAIN: 100 A / 3P CB
INT. CAP. : 22 KAIC

PANEL **0252-3RG**

FEEDER: SEE 1-LINE DIAGRAM
BUSSING: 100 A
LOCATION: COPY ROOM CLOSET 399A
MOUNTED SURFACE

SERVICE	LTG kVA	REC kVA	MTR kVA	MISC kVA	CB A	P	CKT	S/N	CKT	CB P	A	MISC kVA	MTR kVA	REC kVA	LTG kVA	SERVICE
REC OFFICE 385		1.08			20	1	1		2	1	20			0.90		REC OFFICE 370
REC OFFICE 383		1.08			20	1	3		4	1	20			1.08		REC OFFICE 372
REC OFFICE 381		1.08			20	1	5		6	1	20			1.08		REC OFFICE 374
REC OFFICE 379		1.08			20	1	7		8	1	20			1.08		REC OFFICE 376
REC OFFICE 377		1.08			20	1	9		10	1	20			1.08		REC OFFICE 380
REC OFFICE 375		1.08			20	1	11		12	1	20			1.08		REC OFFICE 382
REC OFFICE 373		1.08			20	1	13		14	1	20			1.08		REC OFFICE 384
REC OFFICE 371		1.08			20	1	15		16	1	20			1.08		REC OFFICE 386
REC OFFICE SERVICE/ MAIL...		0.54			20	1	17		18	1	20			1.08		REC OFFICE 391
REC OFFICE SERVICE/ MAIL...		0.54			20	1	19		20	1	20			1.08		REC OFFICE 393
REC OFFICE SERVICE/COPY...		0.36			20	1	21		22	1	20			1.08		REC OFFICE 395
SPARE					20	1	23		24	1	20			1.08		REC OFFICE 397
SPARE					20	1	25		26	1	20	0.80				EMCS
SPARE					20	1	27		28	1	20	0.80				EMCS
SPARE					20	1	29		30	1	20					SPARE
SPARE					20	1	31		32	1	20					SPARE
SPACE					--	--	33		34	1	20					SPARE
SPACE					--	--	35		36	1	20					SPARE
SPACE					--	--	37		38	--	--					SPACE
SPACE					--	--	39		40	--	--					SPACE
SPACE					--	--	41		42	--	--					SPACE
												1.60		22.86		TOTAL

LOAD CLASSIFICATION	CONNECTED LOAD	DEMAND FACTOR	ESTIMATED DEMAND	PANEL TOTALS			
REC	22.86 kVA	71.87%	16.43 kVA	ØA :	8.72 kVA	=	74.8 A
MISC	1.60 kVA	100.00%	1.60 kVA	ØB :	8.72 kVA	=	74.8 A
				ØC :	7.02 kVA	=	58.5 A
				CALCULATED DEMAND =	18.03 kVA	=	50.0 A
				TOTAL WITH 25% SPARE =	22.54 kVA	=	62.6 A

MINIMUM FEEDER SIZE : FIRST 10KVA REC@100%+50% REMAINDER REC+125% LTG+100% MTR+25% LARGEST MTR+100% MISC

VOLTS: 120/208V, 3Ø, 4W
MAIN: 100 A / 3P CB
INT. CAP. : 22 KAIC

PANEL **0252-3RH**

FEEDER: SEE 1-LINE DIAGRAM
BUSSING: 100 A
LOCATION: COPY ROOM CLOSET 399A
MOUNTED SURFACE

SERVICE	LTG kVA	REC kVA	MTR kVA	MISC kVA	CB A	P	CKT	S/N	CKT	CB P	A	MISC kVA	MTR kVA	REC kVA	LTG kVA	SERVICE
FURNITURE OPEN OFFICE 388		0.36			20	1	1		2	1	20	1.20				DISPOSAL SCHOL ACTIVITY 390
FURNITURE OPEN OFFICE 388		0.36			20	1	3		4	1	20			0.54		REC SCHOLARLY ACTIVITY 390
FURNITURE OPEN OFFICE 388		0.72			20	1	5		6	1	20	1.20				REFRIG SCHOL ACTIVITY 390
FURNITURE OPEN OFFICE 388		0.36			20	1	7		8	1	20	0.60				AV EQUIPMENT SA 390
FURNITURE OPEN OFFICE 388		0.36			20	1	9		10	1	20	0.60				AV EQUIPMENT SA 390
FURNITURE OPEN OFFICE 388		0.18			20	1	11		12	1	20	0.88				MOTORIZED SHADES 390
FURNITURE OPEN OFFICE 388		0.36			20	1	13		14	1	20			0.72		REC LOBBY 3C1
FURNITURE OPEN OFFICE 388		0.36			20	1	15		16	1	20			0.72		REC HALLWAY 3C6
FURNITURE OPEN OFFICE 388		0.72			20	1	17		18	1	20	0.24				CAMERA POWER SUPPLY 3C8
COPIER COPY ROOM 399A				0.60	30	2	19		20	1	20					SPARE
--				0.60	--	--	21		22	1	20					SPARE
REC SCHOLARLY ACTIVITY 390		0.18		0.30	20	1	23		24	1	20					SPARE
REC SCHOLARLY ACTIVITY 390		0.36			20	1	25		26	1	20					SPARE
SPARE					20	1	27		28	1	20					SPARE
SPARE					20	1	29		30	1	20					SPACE
SPARE					20	1	31		32	--	--					SPACE
SPACE	